GAME NO. 0E35
FORM NO. 0E35-00300-0100

STRANGE SCIENCE

Operating Manual

Bally/MIDWAY™ MFG. CO.

10601 W. Belmont Ave. Franklin Park, Illinois 60131
Telephone (312) 451-9200

WARNING

THIS GAME MUST BE GROUNDED. FAILURE TO DO SO MAY RESULT IN DESTRUCTION TO ELECTRONIC COMPONENTS.

WARNING: This equipment generates, uses and can radiate radio frequency energy and if not installed and used in accordance with the instruction manual, may cause interference to radio communications. It has been tested and found to comply with the limits for a CLASS A computing device pursuant to SUBPART J of PART 15 of FCC RULES, which are designed to provide reasonable protection against such interference when operated in a commercial environment. Operation of this equipment in a residential area is likely to cause interference in which case the user at his own expense will be required to take whatever measures may be required to correct the interference.

ELECTRICAL BULLETIN: FOR ALL APPARATUS COVERED BY THE CANADIAN STANDARDS ASSOCIATION (CSA) STANDARD C22.2 NO. 1, WHICH EMPLOYS A SUPPLY CORD TERMINATED WITH A POLARIZED 2-PRONG ATTACHMENT PLUG.

CAUTION: TO PREVENT ELECTRIC SHOCK DO NOT USE THIS (POLARIZED) PLUG WITH AN EXTENSION CORD, RECEPTACLE OR OTHER OUTLET UNLESS THE BLADES CAN BE FULLY INSERTED TO PREVENT BLADE EXPOSURE.

ATTENTION: POUR PREVENIR CHOCS ELECTRIQUES NE PAS UTILISER CETTE FICHE POLARISEE AVEC UN PROLONGATEUR. UNE PRISE DE COURANT OU UNE AUTRE SORTIE DE COURANT, SAUF SI LES LAMES PEUVENT ETRE INSEREES A FOND SANS EN LAISSER AUCUNE PARTIE A DECOUVERT.

Bally/MIDWAY T.M.

Invites You To Use

OUR TOLL FREE NUMBER FOR SERVICE INFORMATION CONCERNING THIS GAME, OR ANY OTHER BALLY/MIDWAY™ GAME YOU NOW HAVE ON LOCATION.

CALL US FOR PROMPT, COURTEOUS ANSWERS TO YOUR PROBLEMS.

Video or Pinball - Continental U.S. 800-323-7182

Bally/MIDWAY T.M. 10601 West Belmont Avenue Franklin Park, Illinois, 60131 phone (312) 451-9200

©COPYRIGHT MCMLXXXVI BY BALLY MIDWAY MFG. CO. ALL RIGHTS RESERVED.

NO PART OF THIS PUBLICATION MAY BE REPRODUCED BY ANY MECHANICAL, PHOTOGRAPHIC, OR ELECTRONIC PROCESS, OR IN THE FORM OF A PHONOGRAPHIC RECORDING, NOR MAY IT BE TRANSMITTED, OR OTHERWISE COPIED FOR PUBLIC OR PRIVATE USE, WITHOUT PERMISSION FROM THE PUBLISHER. THIS MANUAL IS FOR SERVICE USE ONLY, AND NOT FOR GENERAL DISTRIBUTION. FOR PERMISSION REQUESTS, WRITE: BALLY MIDWAY MFG. CO., 10601 W. BELMONT AVE., FRANKLIN PARK, IL 60131.

Printed In U.S.A.

TABLE OF CONTENTS

SECTION 1
INSTALLATION AND GENERAL GAME OPERATION INSTRUCTIONS

DESCRIPTION	PAGE
I. INSTALLATION	1-1
II. GENERAL GAME OPERATION	1-1
III. TAILORING & TESTING THE GAME	1-2
IV. GAME REGISTERS & OPTIONS	1-4
V. RECOMMENDED 3 & 5 BALL REGISTER OPTION SETTINGS	1-6
VI. TROUBLESHOOTING ON LOCATION	1-7
VII. SOLENOID & SWITCH IDENTIFICATION TABLES	1-10
VIII. ROUTINE MAINTENANCE ON LOCATION	1-11
IX. SWITCH ASSEMBLY ADJUSTMENTS	1-11
X. SERVICE HINTS	1-11
XI. PANEL TOP PARTS (W/O RAMPS) LIST	1-12
XII. RAMP PARTS, RUBBER RINGS & POST LIST	1-13
XIII. FEATURE OPERATION AND SCORING	1-15

SECTION 2
COMPONENT LAYOUTS, SCHEMATICS & WIRING DIAGRAMS

DESCRIPTION	PAGE
6803 PINBALL POWER MODULE P.C.B.—COMPONENT LAYOUT	2-1
6803 PINBALL POWER MODULE P.C.B.—SCHEMATIC	2-3
PINBALL SOUND P.C.B.—COMPONENT LAYOUT	2-4
PINBALL SOUND P.C.B.—SCHEMATIC	2-7
DUAL DISPLAY P.C.B.—COMPONENT LAYOUT	2-10
DUAL DISPLAY P.C.B.—SCHEMATIC	2-13
6803 CONTROL BOARD P.C.B.—COMPONENT LAYOUT	2-14
6803 CONTROL BOARD P.C.B.—SCHEMATIC	2-18
DUAL SOLID-STATE P.C.B.—COMPONENT LAYOUT	2-22
DUAL SOLID-STATE P.C.B.—SCHEMATIC	2-22
WIRING DIAGRAM—CABINET	2-23
WIRING DIAGRAM—PLAYFIELD	2-24
WIRING DIAGRAM—BACKBOX	2-25
EPROM LIST	INSIDE BACK COVER

TABLE OF FIGURES

FIGURE	PAGE
I. BLOCK DIAGRAM	ii
IIa. TOP PANEL: SOLENOID & SWITCH IDENTIFICATION	1-10
IIb. TOP PANEL (W/O RAMPS) PARTS	1-12
IIc. TOP PANEL: RAMPS, RUBBER RINGS & POST	1-13
III. ELECTRONIC PINBALL MACHINE	1-14

BLOCK DIAGRAM—ELECTRONIC PINBALL GAME

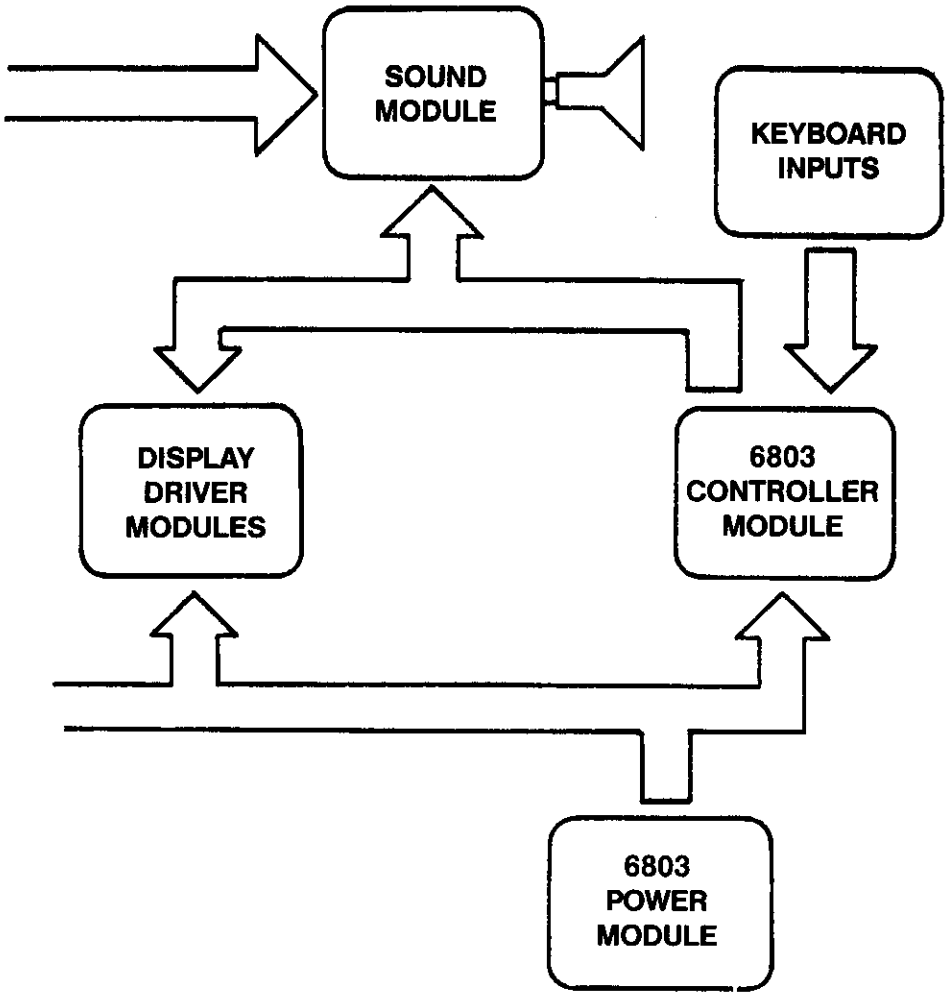

FIGURE I.

CAUTION

When moving your Strange Science Pinball Game, allow clearance for the neon tube and its plastic cover which are mounted on top of the back box. We recommend that you detach the back box, pivot it forward on its hinges, and lay the back box on the cabinet before moving the game.

WARNING

Remove power to the game & disconnect the cable going to the primary of the high voltage transformer, which is located behind the shield in the back box, when:

1. Servicing the neon tube.
2. The neon tube breaks or fails (when this occurs, the cable must remain disconnected before powering the game up).
3. Removing this shield for any reason.

Disconnect the 2-pin connector for this cable (marked "CAUTION HIGH VOLTAGE") located in the lower left corner of the back box.

DETACHING OF PIN-GAME BACK BOX

When the back box is in a upright position and the 3/8" hold-down bolts are removed, the back box can be removed from the main cabinet by lifting the right corner of the back box (about 3/4") and pulling it slightly towards you. Now both hinges are disengaged and the back box can be removed.

"IMPORTANT NOTICE-5 BALL"

ALL 5 PLAYFIELD BALLS MUST BE INSERTED IN THE OUTHOLE TROUGH.

GAME WILL NOT START IF THERE IS A BALL IN SHOOTER LANE IN GAME OVER MODE.

M051-00365-A045

SECTION 1

I. INSTALLATION

First, bolt legs to cabinet. Second, feed line cord between back box and cabinet then lift the back box and secure with bolts. Insert the smaller ball (15/16" dia.) into the ball tilt assembly, and adjust the bracket so the ball will roll free to the contact switch blade, if the front of the cabinet is raised.

On all games these are certain items that should be checked after shipment.

1. Check that all cable connectors are completely seated on printed circuit assemblies.
2. Check that all cables are clear of moving parts.
3. Check for wires that may have been disconnected.
4. Check switches for loose solder or other foreign material that may have come loose in shipment and could cause shorting of contacts.
5. Check coils for proper soldering. Cold solder connections may not show up in factory inspection, but vibration in shipment may break contact.
6. Check that fuses are firmly seated and making good contact.
7. Check and adjust the plumb bob tilt on the left side of the cabinet.
8. Check wiring of the plug on the transformer to correspond to location voltage.
   115 VAC 2-8, 3-6, 7-10
   120 VAC 2-8, 4-6, 7-11
   220 VAC 4-8, 7-9
   240 VAC 4-8, 7-11
9. Place ball into playfield by outhole (or balls if the game requires more than one ball).
10. Plug in line cord.

II. GENERAL GAME OPERATION

Move the ON/OFF switch at the bottom right front corner of the cabinet to "ON" position. The game will play a power-up sequence and reset the drop targets. If any switches are stuck they will be displayed at this time. After a short delay "1-4 can play" will indicate that the game is ready to play. The game should accept the coin and post the appropriate credits. Pressing the credit button on the cabinet will cause the outhole kicker to serve the ball to the shooter alley. A game-up sequence is played to announce play-readiness.

Each time the credit button is pressed it posts one player and the credits are reduced by one.

Shooting the ball initiates play.

The game awards all points earned by the player. If a spinner is turned and scoring when the ball hits a target, the spinner and the target scores are awarded.

When the ball enters the outhole, the bonus score is added to the total score. The player-up and/or ball in play is advanced one position. The outhole kicker serves the ball to the shooter alley and play is resumed. This continues until each player has played the allowable number of balls per game. At this time a random Match number appears. If the number is the same as the last two digits in a player's score, a free game is awarded.

Extra balls won during the course of the game are played immediately after the player's regular ball enters the outhole. The player-up and/or ball in play are not advanced for extra score before the game serves the extra ball for play.

Slamming the machine results in loss of the game. This causes all feature lights to go out, the game goes "dead" and a time delay occurs. This occurs anytime either one of the slam switches make contact. This is to discourage unnecessary abuse to the game. After the delay, "1 to 4 can play" is displayed followed by the power-up sound sequence.

Any number of slam switches could be installed by the operator, to meet his individual requirement. The switch should be adjusted to have approximately 1/16" gap between the contacts. The weighted blade should be adjusted to attain the desired sensitivity. Decreasing the gap between contacts will make the switch more sensitive. Opening the gap will reduce sensitivity.

If at the end of the game either the "High Score to Date" is beaten or if the score is over 10,000,000 free games will be awarded according to the "High Score to Date" register setting.

Tilting the game results in loss of a ball. Bonus points are not scored. The flippers, thumper bumpers, etc. go 'dead'. The purpose of the tilt penalty is to discourage the player from jostling the machine in an attempt to prolong play. Game action becomes normal after the ball kicker assembly serves the ball to the shooter alley.

NOTE: These are general instructions. Therefore, if a spinner or Drop Target is not used on your specific pinball game, please disregard any operating instructions related to these devices.

III. TAILORING & TESTING THE GAME

INTRODUCTION

We at Bally/Midway are very proud to introduce our new system which not only provides more information to the operator but it also communicates with the player thru the use of alphanumerics.

It was our aim to design a system which could be used without a manual. This will come to light the moment you press the Self-test button and the displays come to life with their messages of assistance. This allows you to change game features, awards and threshold settings and monitor specific special awards, game percent and income just by reading what is displayed. The registers are now described with useful titles such as "Book-keeping Data" or "Self-Testing."

If you've ever changed the replay thresholds on a machine and you forgot to change the replay card because you were distracted by a customer, listen to this: "It will never happen again!" For when you change this replay threshold to 2,000,000 in "Percent Options" the corresponding message; "First Replay at 2,000,000" will be displayed on Game Over.

OPERATION

The keyboard is located on the right inside wall of the game near the front door. The cable is long enough, so that once the keyboard is removed, it may be operated from outside the machine. **Note:** The keypad is mounted with a 1/4" Hex screw for shipping purposes.

1. Press the Test button located on the front door. This tells the processor to do the following;
   A. It checks the switches wired in parallel with the keypad. If any switches are closed the game automatically jumps to Stuck Switch Test and displays a stuck switch message.
   B. If there were no stuck switches you will be welcomed with "Bally's Testing Is Easy As ABC."
2. When appropriate heading appears on backglass display, press "Enter" on keypad once.
   Within each heading, there are categories which are operator selectable. When the appropriate category appears on the backglass display, press "Enter" once to access that category.
3. Set your registers with keypad.
4. Press "Enter" again to advance to next category setting. Press "CLR" to re-start Self-Test. Press "Game" to lock-in option settings.

STEPPING THROUGH

To choose a category quickly once the Test Mode has been selected just use the "A" button to step to the desired category. If you pass by the category you desired, use the "B" button to back-up to the appropriate position. Once you read the category desired, press the "ENTER" button to select that topic. The display will now show the first item in that category.

Again, use the "A" and "B" buttons to quickly step to the item you wish to look at or change. The "A" button allows you to step to the end of a category and then out to the next category. The "B" button allows you to step backwards in the same manner. **Please note:** When in the Self-Test category, the display will cycle automatically from one test to the next. Because the "A", "B", and "C" buttons are used for different functions in this category. They cannot be used to step from one test to another properly. To exit a test in this category just press the ENTER button & step to the next test.

SELF-PERCENTAGING

1. The term Self-Percentaging refers to the game's ability to automatically adjust the score level of Threshold 1 to attain a desired replay percentage, also known as the TARGET PERCENT. (see article #8)
2. Self-Percentaging also applies to extra balls, when used instead of replays.
3. Initially, a minimum of 200 games must be played before the Self-Percentaging Process goes into effect. It then monitors the current replay percentage of Threshold 1 ONLY and makes an adjustment, if necessary, every 50 games.
4. The Self-Percentaging Process will automatically adjust the score level of Threshold 1 **ONLY**. It makes NO adjustments to OTHER "Award" features in the game.
5. Located within the "PERCENT OPTIONS" category of your game's test mode are the following registers:
   - **THRESHOLD 1**
   - **SELF PERCENT**
   - **TARGET PERCENT**
   - **THRESHOLD 1 PERCENT**

   Each of these registers are explained in detail further in this text.

6. To set or check the current score level of Threshold 1:
   A. "Step through" your game's test mode, using the "A" or "B" button on the keypad, until you reach a category titled: "PERCENT OPTIONS."
   B. Press the "ENTER" button to select this category.
   C. The first register displayed will be THRESHOLD 1.

   THRESHOLD 1—This register displays the current score level of the 1st Replay Threshold. Enter any value from 0 to 9,999,999 to set the desired score level.

7. To activate the Self-Percentaging Process:
   A. "Step through" your game's test mode, using the "A" or "B" button on the keypad, until you reach a category titled "PERCENT OPTIONS."
   B. Press the "ENTER" button to select this category.
   C. Again, use the "A" button to "step through" until you reach a register titled: "SELF PERCENT."

   SELF PERCENT—This register displays whether the Self-Percentaging Process is OFF or ON. Enter "O" to turn OFF or "1" to turn ON.

8. To adjust the desired Replay Percentage for Threshold 1:
   A. "Step through" your game's test mode, using the "A" or "B" button on the keypad, until you reach a category titled "PERCENT OPTIONS."
   B. Press the "ENTER" button to select this category.
   C. Again, use the "A" button to "step through" until you reach a register titled: "TARGET PERCENT."

   TARGET PERCENT—This register displays the desired percentage of replays to be awarded for reaching Threshold 1. For example, if you want Threshold 1 to award a replay in 15% of the games played, you would press keys "1," "5" and then "ENTER." This register will then display "15%" as your goal or "TARGET PERCENT."

   NOTE: This register automatically defaults to a factory setting of "10%," when the "FACTORY RESET" register is enabled.

9. The TOTAL Replay Percentage will be 10% or 15% higher with the addition of Match, Special and High Score to Date credits.

10. To manually check the current replay percentage of Threshold 1 ONLY:
    A. "Step through" your game's test mode, using the "A" or "B" button on the keypad, until you reach a category titled "PERCENT OPTIONS."
    B. Press the "ENTER" button to select this category.
    C. Again, use the "A" button to "step through" until you reach a register titled: "THRESHOLD 1 PERCENT."

    THRESHOLD 1 PERCENT—The figure displayed in this register is the actual percentage of replays awarded for reaching Threshold 1. Progress of the Self-Percentaging Process may be monitored by comparing the current value displayed in this register with the "TARGET PERCENT."

11. The size of adjustment, made by the Self-Percentaging Process to the score level of Threshold 1, is determined by the current difference between the "TARGET PERCENT" (entered by the operator) and the actual percentage of replays awarded for reaching Threshold 1.
    - A difference of 10% or more will result in a 10% adjustment.
    - A difference equal to or greater than 5%, but less than 10%, will result in a 5% adjustment.
    - A difference less than 5% will result in a 1% adjustment.

12. To check the current score level of Threshold 1, refer to article #6.

13. When the "CLEAR BOOKKEEPING" register is enabled, the Self-Percentaging Process is reinitiated.

IV. GAME REGISTERS & OPTIONS

BOOKKEEPING DATA

Total Coins	Number of coins thru chutes 1, 2, & 3
Game Percent	Percentage of replays
Coins Chute 1	# of coins thru chute 1
Coins Chute 2	# of coins thru chute 2
Coins Chute 3	# of coins thru chute 3
Bonus Credits	Number of Bonus Credits Given
Total Plays	Number of plays both paid and replays
Total Replays	Number of awarded games
Service Meter	Total # of service credits
Game Credits	Current game credits—Enter 0 thru 5 Added to Service Meter Not added to current Game Credits.
Special Meter	Total # of Playfield Specials awarded
Clear Booking	To clear bookkeeping press "65" then "Enter"

SELF-TESTING

Single Lamp	Steps one lamp at a time, and Connector I.D. Press "A" to advance, "B" to backup, and "C" to cycle
All Lamps	All lamps light alternately, 1st "A" phase then "B"
Display	Steps thru alphanumeric character set
Solenoid	Fires one driver at a time, and Displays Driver and Connector I.D.
Single Solenoid	Fires one driver at a time. Press A for same solenoid B for next
Sound	Plays game sounds
Game Rom I.D.	Displays your Rom or Roms I.D.
Switch Test	Displays stuck switch by description PRESS TEST BUTTON ON DOOR TO EXIT SWITCH TEST

PERCENT DATA VALUES

Game Percent	Percentage of replays
Total Plays	Number of plays both paid and replays
Game Time	Total number of minutes
Total Replays	Total number of replays
Threshold 1	# of times the first threshold was beaten
Threshold 2	# of times the second threshold was beaten
Threshold 3	# of times the third threshold was beaten
Timed Special	# of timed Specials awarded by completing each Outlane
Hiscore Beaten	Total number of times the high score was beaten
Extra Balls	# of non-timed extra balls that were awarded
Timed X-Balls	# of timed extra balls that were awarded
Hold Bonus	# of times Hold Bonus was awarded
Strange Science	# of times S-T-R-A-N-G-E S-C-I-E-N-C-E was completed
Outlane Special	# of non-timed Specials awarded by completing each Outlane
Anti-Gravity	# of times Anti-Gravity was completed
Particle Separator	# of times Particle Separator was completed
Brain Transfer	# of times Brain Transfer was completed
Load Ball	# of times each ball was loaded in Atom Smasher
Unload Ball	# of times each ball was unloaded from Atom Smasher
All Load	# of times all 5 balls were loaded in Atom Smasher
Multi-Release	# of times a ball was loaded during Multi-Ball play

PERCENT OPTIONS

		FACTORY SETTINGS
Threshold 1	Enter 0 thru 9,999,999; sets award level and display	1,500,000
Self Percent	Enter 0 or 1; 0 disables Self-Percentaging Process, 1 enables Self-Percentaging Process	1
Target Percent	Enter desired percentage of replays awarded for reaching Threshold 1.	10
Threshold 1 Percent	Displays actual percentage of replays awarded reaching Threshold 1.	Unchanged
Threshold 2	Enter 0 thru 9,999,999; sets award level and display	3,500,000
Threshold 3	Enter 0 thru 9,999,999; sets award level and display	00
Highest Score	Enter 0 thru 9,999,999; sets the HiScore replay level	5,555,555

BASIC OPTION VALUES

Credit Limit	Enter 1 thru 40	10
Balls per Game	Enter 1 thru 5	3
Threshold Mode	Enter 0 thru 3; 0=0, 1=Points, 2=Extra Ball, 3=Replay	3
Special Mode	Enter 0 thru 3; 0=0, 1=Points, 2=Extra Ball, 3=Replay	3
HiScore Mode	Enter 0 thru 3; 0=0, 1=1 Replay, 2=2 Replays, 3=3 Replays	3
Sound Mode	Enter 0 thru 3; 0=Chimes w/o background, 2=Sounds w/o background 1=Chimes with background, 3=Sounds with background	3
German Prize	German Meter	0
Match Option	Enter 0 or 1; 0 disables match, 1 enables match	1
Credit Display	Enter 0 or 1; 0=No credits displayed, 1=Displayed credits	1
No Limit Replays	Enter 0 or 1; 0=Only 1 award per game, 1=More than 1 per game	1
Free Play	Enter 0 or 65; 0=Coins, 65=Free Play	0
Slingshot	Enter 0 or 1; 0=No slingshots, 1=slingshots	1
Tilt Warning	Enter 0 thru 3; 0=No warning, 1=1, 2=2, 3=3	1

FEATURE OPTIONS

Reset Factory — Enter 65 for factory selected scores and features.

Power Saver — Enter 0 thru 5; This entry controls # of new balls to which Power Saver feature is initially provided.

ENTER	NEW BALL #
0	None
1	1
2*	1 & 2
3	1, 2 & 3
4	1 thru 4
5	1 thru 5

Award Count — Enter 0 thru 3; This entry controls number of times on Anti-Gravity (when lit) required to active Extra Ball light, award Extra Ball, and to active Special light.

ENTER	EXTRA BALL LIGHT	EXTRA BALL	SPECIAL LIGHT
0	6 times	7 times	8 times
1	5 times	6 times	7 times
2	4 times	5 times	6 times
3*	3 times	4 times	5 times

Extra Ball Timer — Enter 0 thru 2; This controls length of time Extra Ball light flashes after being activated.
0=8 sec. 1*=16 sec. 2=24 sec.

Special Timer — Enter 0 thru 3; This controls length of time Special light flashes after being activated.
0=8 sec. 1*=16 sec. 2=24 sec. 3=until end of current ball

Attract Sound — Enter 0 or 1*; When game is over, this entry enables or disables Attract Sound Mode while displaying hi scores and instructions.
0=No Sound 1=Sound

*Factory Setting

PRICING OPTIONS

Chute 1 Options

XX coin for yy credit; Coins (xx) will flash first. Enter 1 thru 99 coins. Then credits (yy) will flash. Enter 1 thru credit limit. Then coins will flash again. Either press Enter if the values are correct or repeat the data entry.

Chute 1 Bonus; Enter 0 thru 40; 0=No Bonus Credit
1 thru 40 sets the number of credits at which 1 Bonus Credit will be awarded.

Chute 2 Options

XX coin for yy credit; Coins (xx) will flash first. Enter 1 thru 99 coins. Then credits (yy) will flash. Enter 1 thru credit limit. Then coins will flash again. Either press Enter if the values are correct or repeat the data entry.

Chute 2 Bonus; Enter 0 thru 40; 0=No Bonus Credit
1 thru 40 sets the number of credits at which 1 Bonus Credit will be awarded.

Chute 3 Options

XX coin for yy credit; Coins (xx) will flash first. Enter 1 thru 99 coins. Then credits (yy) will flash. Enter 1 thru credit limit. Then coins will flash again. Either press Enter if the values are correct or repeat the data entry.

Chute 3 Bonus; Enter 0 thru 40; 0=No Bonus Credit
1 thru 40 sets the number of credits at which 1 Bonus Credit will be awarded.

Example:

To set Coin Chute 1 for 3 credits/2 Coins with no credits on the first coin;
Enter 02 Coin for 03 Credit Chute
Chute 1 Bonus 00

To set it for 3 Credits/2 Coins with one credit delivered on the 1st coin and 2 credits delivered on the second.
Enter 01 Coin for 01 Credit
Chute 1 Bonus 02

If all 3 Chute Options and Bonus Registers are set the same, then all Chutes will work "together."

V. RECOMMENDED 3 & 5 BALL OPTION SETTINGS

REPLAYS	3-BALL	5-BALL
Special Mode	3	3
Match Option	1	1
High Score Mode	3	3
1st replay at	1,500,000	2,500,000
2nd replay at	3,500,000	4,500,000
X-BALL		
Special Mode	2	2
Match Option	0	0
High Score Mode	0	0
1st Extra Ball at	1,500,000	2,500,000
2nd Extra Ball at	3,500,000	4,500,000
NOVELTY		
Special Mode	1	1
Match Option	0	0
High Score Mode	0	0

HIGH GAME TO DATE (reset periodically)

3-BALL 5,555,555 5-BALL 5,555,555

STRANGE SCIENCE OPTION SETTINGS

FEATURE OPTIONS

REGISTER	3-BALL	5-BALL
POWER SAVER	2	2
AWARD COUNT	3	3
EXTRA BALL TIMER	1	1
SPECIAL TIMER	1	1
GAME OVER ATTRACT SOUND	1	1
In Basic Options:		
SLINGSHOT	1	1
TILT WARNING	1	1

VI. TROUBLESHOOTING ON LOCATION

SYMPTOM: WON'T POWER UP
Game does not play power-up tune when power is turned on. General illumination is present.

ACTION:
A. Check Fuses.
B. Turn power OFF. Open back box. Locate light emitting diode (LED) on Control Board.
C. Turn power ON. LED must flash 9X to indicate that the module is good. Correct sequence is flash-pause-flash and then seven more flashes and LED goes out.
D. If LED does not come on or does not flash, or flashes, but less than 9X, turn off power. Check fuses. If fuses are good, replace Control Board.

CAUTION: Replacement Control Board must have same Part Number or incorrect operation will result! See Parts List for Control Board.

Turn power ON.

E. If game is correct, it is now ready for play. If game is not correct, contact the Bally-Midway service department.

SYMPTOM: LAMPS
One or some switched lamps always ON or not all feature lamps light during play.

ACTION:
A. With power ON, open front door. Select SELF TEST-Lamp Tests with keyboard. If game is correct **all** feature lamps flash ON and OFF.
B. Carefully raise playfield or open back box to gain access to lamps.
C. Replace bulbs that do not flash.
D. If game is correct, it is now ready for play.
E. If game is not correct, turn power OFF. Replace Control Board. Turn power ON and repeat A.
F. If game is correct, it is now ready for play. If game is not correct, contact Bally-Midway service department.

SYMPTOM: DISPLAYS
I. Display digits improper on **one** or **several,** but less than all Display Driver Module(s). Improper: One or several segments always OFF, digits mottled or several segments or digit(s) always ON.

ACTION:
A. With power ON, open front door. Select SELF TEST-Display Test with keyboard. If the game is correct, each digit on each Display displays the count 0 through 9 and alphabet in all 7 digit positions. Note defective Display Driver modules.
B. Turn power OFF.

WARNING: High Voltage is supplied to the Display Driver Modules, from the Power Module. Wait 30 seconds for High Voltage to Bleed Off.

C. Replace Display Driver module(s). Turn power ON. Repeat A.
D. If game is correct, it's now ready for play. If game is not correct contact Bally-Midway service department.

II. **All** displays improper. Improper: Digit(s) always on or off/segment(s) always on or off, all displays.

ACTION:
A. With power ON, open front door. Select SELF TEST-Display Test with keyboard. If the game is correct, each digit on each Display displays the count 0 through 9 and alphabet in all 7 digit positions. Note defective Display Driver modules.
B. Replace Control Board. Turn power ON. Repeat A.

CAUTION: Replacement Control Board must have same Part Number or incorrect operation will result! See Parts List for Control Board.

C. If game is correct, it is now ready to play. If game is not correct, contact Bally-Midway service department.

III. One or several displays always off.

ACTION:
A. With power ON, open front door. Select SELF TEST-Display Test with keyboard. If the game is correct, each digit on each Display displays the count 0 through 9 and alphabet in all 7 digit positions. Note defective Display Driver modules.
B. Turn power OFF.
C. Replace Display Driver module(s). Turn power ON. Repeat A.
D. If game is correct, it is now ready for play. If game is not correct contact Bally-Midway service department.

SYMPTOM: SOLENOIDS

I. One or more solenoids do not pull-in during course of game.

ACTION:

A. With power ON, open front door. Select SELF TEST-Solenoid Test with keyboard.
B. If game was correct, each solenoid would be energized. The Solenoid name appears with the Driver Q Number and connector jack and pin numbers. (**NOTE:** If most of the Playfield Solenoids DO NOT operate, check the Playfield Fuse to see if it is blown. It is generally found near the Flipper Assemblies.)
C. Carefully lift the playfield (or open the back box) to gain access to the solenoid. Turn power OFF. Inspect the solenoid.
D. If a lead is broken off, repair. Repeat A & B. If game is correct, it is now ready for play. If solenoid wiring was correct, turn power OFF.
E. Replace Control board. See CAUTION NOTE.
F. Repeat A & B. If game is correct, it is now ready to play. If game is not correct, turn power OFF.
G. Replace Sound Module A8.
H. Repeat A & B. If game is correct it is now ready to play. If game is not correct, contact the Bally-Midway service department.

II. Solenoid(s) are always energized. **NOTE:** If impulse solenoids (ball ejects, slingshots, thumper-bumpers, etc.) are energized continuously, they are subject to damage. Limit troubleshooting to one minute with power ON, followed by **five minutes with power OFF.** Repeat as necessary. Replace damaged solenoids. (**NOTE:** When troubleshooting Playfield Solenoid Circuits, be advised that a constantly energized Solenoid (i.e. Thumper-Bumper) will blow the Playfield Fuse in a few seconds. To avoid replacing the Fuse repeatedly, try to isolate the faulty Solenoid Circuit as soon as the game power switch is flipped ON.)

ACTION:

A. With power ON, open front door. Select SELF TEST-Solenoid Test with keyboard.
B. If game was correct, each solenoid would be energized. The Solenoid name appears with the Driver Q Number and connector jack and pin numbers. (**NOTE:** If most of the Playfield Solenoids DO NOT operate, check the Playfield Fuse to see if it is blown. It is generally found near the Flipper Assemblies.)
C. Carefully lift the playfield (or open the back box) to gain access to the solenoid. Turn power OFF. Inspect the solenoid.
D. If a lead is broken off, repair. Repeat A & B. If game is correct, it is now ready for play. If Solenoid wiring was correct, turn power OFF.
E. Replace Control Board. See CAUTION NOTE.
F. Repeat A & B. If game is correct, it is now ready to play. If game is not correct, turn power OFF.
G. Replace Sound Module A8.
H. Repeat A & B. If game is correct, it is now ready to play. If game is not correct contact the Bally-Midway service department.

SYMPTOM: NO SOUND

ACTION:

A. With power ON, open front door. Select SELF TEST-Sound Test with the keyboard.
B. Turn volume control clockwise to Max.
C. If correct, sound will be heard. If incorrect, try seating speaker lead connector (J2) and input connector (J1).
D. If correct, sound will be heard. If incorrect, contact the Bally-Midway service department.

SYMPTOM: SWITCHES

Feature (Drop Targets, Stand-up, etc.) does not score.

ACTION:

A. With power ON, open front door. Select SELF TEST-Switch Test with the keyboard.
B. If game is correct, "All Switches Open" is displayed. Otherwise, the name of the switch(es) will be displayed with jack and pin numbers.
C. Carefully lift the playfield. Locate the switch assembly identified from the display. Visually inspect the switch assembly. If the contacts are stuck, re-gap them to 1/16." Repeat A & B. If the game is correct, it is now ready to play. If the game is not correct, turn power OFF.
D. Replace Control board. See CAUTION NOTE.
E. Repeat A & B. If game is correct, it is now ready to play. If game is not correct, contact the Bally-Midway service department.

CAUTION: Replacement Control Board must have the same Part Number or incorrect operation will result! See Parts List for Control Board.

GAME: MOTORDOME PINBALL & FUTURE GAMES

SUBJECT: 6803 CONTROL BOARD POWER UP TEST SEQUENCE

The following is an abbreviated self-test routine for the 6803 Control Board used in Motordome and future pinballs:

1st Flash—(U1) Determine if the internal RAM is good. (6803)

2nd Flash—(U2) Checks to see if the program ROM is good. (27128)

3rd Flash—(U3) Checks to see if the program ROM is good. (27128)

4th Flash—(U4) Checks the C-MOS RAM. (6116P-3)

5th Flash—(U8) Tests PIA0. (6821)

6th Flash—(U7) Tests PIA1. (6821)

7th Flash—(U1) Checks the internal display interrupt generator. (6803)

8th Flash—(U12 & U8) Verifies operation of the phase B switched ill. voltage. NOTE: F5 fuse on the Power Module provides the phase B signal to the Control Board. (U12, 14584) (U8, 6821)

9th Flash—(U1, U11 & U12) Verifies operation of the Phase A switched ill. voltage. NOTE: F4 fuse on the Power Module provides the phase A signal to the Control Board. (U1, 6803) (U11, 4011) (U12, 14584)

The following is an abbreviated self-test routine for the 6809 Sound Board:

1st Flash—(U7) Determines if the ROM is good.

2nd Flash—(U6) Checks to see if the RAM is good.

3rd Flash—(U8) Checks the PIA. (68B21)

The following is an abbreviated self-test routine for the Sounds Deluxe Board:

1st Flash—Determines if the ROM (U11) is good.

2nd Flash—Determines if the ROM (U12) is good.

3rd Flash—Determines if the ROM (U13) is good.

4th Flash—Determines if the ROM (U14) is good.

5th Flash—Checks to see if the RAM (U9, U10) is good.

6th Flash—Checks the PIA (6821) (U7).

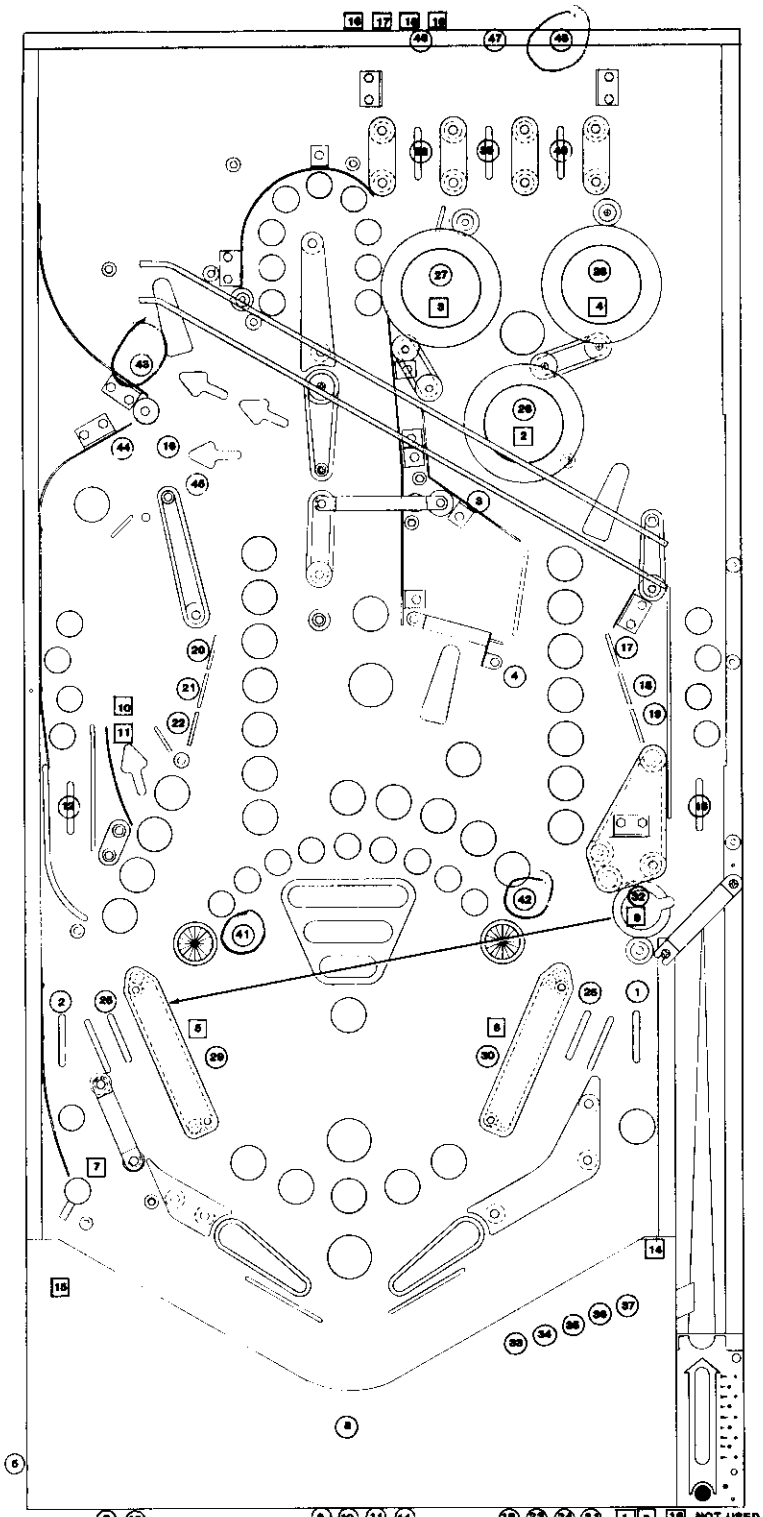

FIGURE II a

SOLENOID IDENTIFICATION TABLE

SELF TEST # SEQUENCE	SOLENOID IDENTIFICATION
1	NOT USED
2	THUMPER BUMPER MIDDLE
3	THUMPER BUMPER LEFT
4	THUMPER BUMPER RIGHT
5	LEFT SLINGSHOT
6	RIGHT SLINGSHOT
7	LEFT BALL SAVE
8	NOT USED
9	RIGHT SAUCER
10	OPEN ATOM SMASHER (LOWER-BALL STOP)
11	CLOSE ATOM SMASHER (RAISE-BALL STOP)
12	OUT KICKER
13	RESERVED FOR GERMAN USE
14	OUTHOLE
15	KNOCKER
16	NOT USED
17	NEON
18	BACKBOX LIGHT
19	FLIPPER (BACKBOX)

SWITCH ASSEMBLY IDENTIFICATION TABLE

SWITCH SELF TEST # SEQUENCE	DESCRIPTION
1	RIGHT OUTLANE
2	LEFT OUTLANE
3	EXIT ANTI-GRAVITY
4	ENTER ANTI-GRAVITY
5	BUTTON LEFT
6	CREDIT
7	BUTTON RIGHT
8	OUTHOLE
9	COINS RIGHT
10	COINS LEFT
11	COINS MIDDLE
12	LEFT BUBBLE LANE
13	RIGHT BUBBLE LANE
14	SLAM
15	TILT
16	NOT USED
17	SCIENCE TARGET TOP
18	SCIENCE TARGET MIDDLE
19	SCIENCE TARGET BOTTOM
20	STRANGE TARGET TOP
21	STRANGE TARGET MIDDLE
22	STRANGE TARGET BOTTOM
23	NOT USED
24	NOT USED
25	RETURN LANES
26	THUMPER BUMPER MIDDLE
27	THUMPER BUMPER LEFT
28	THUMPER BUMPER RIGHT
29	SLINGSHOT LEFT
30	SLINGSHOT RIGHT
31	NOT USED
32	SAUCER RIGHT
33	OUT BALL LEFT-5
34	OUT BALL 4
35	OUT BALL 3
36	OUT BALL 2
37	OUT BALL RIGHT-1
38	(LOWER) LAB 'L'
39	(LOWER) LAB 'A'
40	(LOWER) LAB 'B'
41	BRAIN ROLLOVER LEFT
42	BRAIN ROLLOVER RIGHT
43	UNLOAD BALL LANE
44	LOAD BALL LANE
45	REBOUND
46	(UPPER) LAB 'L'
47	(UPPER) LAB 'A'
48	(UPPER) LAB 'B'

*NOTE: SEQUENCE NUMBERS SHOWN HERE ARE USED AS AN AID IN LOCATING FAULTY SOLENOID OR SWITCH USING DRAWING SHOWN.

VECTOR SHOWING FOR EJECT SAUCER BALL. SHOULD EXIT AS SHOWN.

VIII. ROUTINE MAINTENANCE ON LOCATION:

After successful completion of the Self Diagnostic Test Procedure, set the game up for play. Exercise each roll-over, thumper bumper, slingshot, etc., by hand until each switch assembly on the playfield has been checked for proper operation. If actuating a switch assembly results in intermittent or no response, clean contacts by gently closing them on a clean business card or piece of paper and wiping until they wipe clean. Re-gap, if necessary, to 1/16". Do not burnish or file Gold Plated Switch Contacts.

IX. SWITCH ASSEMBLY ADJUSTMENTS:

GENERAL:
All switch assemblies consist of leaf springs, contacts, separators, plastic tubing and screws to hold them to the mounting surface. Before attempting to adjust a switch assembly, make sure that these screws are tight. If not, tighten screw closest to the contact end of the leaf spring first. This will prevent the assembly from being secured in such a manner that the leaf springs tend to fan out. In general, all leaf springs are adjusted for a 1/16" gap in the open position and .010" over-travel or wipe in the closed position. All contacts should be in good condition. Unless otherwise instructed, they should be dry or non-lubricated. All contacts should be free of dust and dirt. Contacts, with the exception of the flipper button switch assemblies are plated to resist corrosion. Filing or burnishing breaks the finish and encourages corrosion. Clean by closing the contacts over a clean piece of paper (e.g. a lint free business card) and wiping gently until the contacts are clean. For the flipper button switch assemblies **ONLY:** Tarnish can be removed with a contact file followed by burnishing tool. Severely pitted contacts must be placed and adjusted only when they are found to be a source of game malfunction.

X. SERVICE HINTS:

The Bally playfield has an improved tuff-coat finish with excellent wearing properties. Life expectancy of the playfield as well as play appeal, can be extended by periodic cleaning.

DO: Bally recommends you clean your playfield with Wildcat #125 (Wildcat Chemical Co. 1349 East Seminary Drive; Fort Worth, Texas 76115; Phone 1-817/924-8321). Wildcat #125 is a combination cleaner and polish. Bally has tried and tested this product and found it to be very effective. If Wildcat #125 is not available, Bally suggests you ask your distributor to order it. Inspect and hand polish the ball in a clean cloth. A chipped ball must be replaced. It can ruin the finish on the playfield in a short period of time.

DON'T: Use water in large quantities, highly caustic cleaners, abrasive cleaners and cleaning pads on the playfield, or allow a wax or polish build up. Waxes yellow with age and spoil appeal.

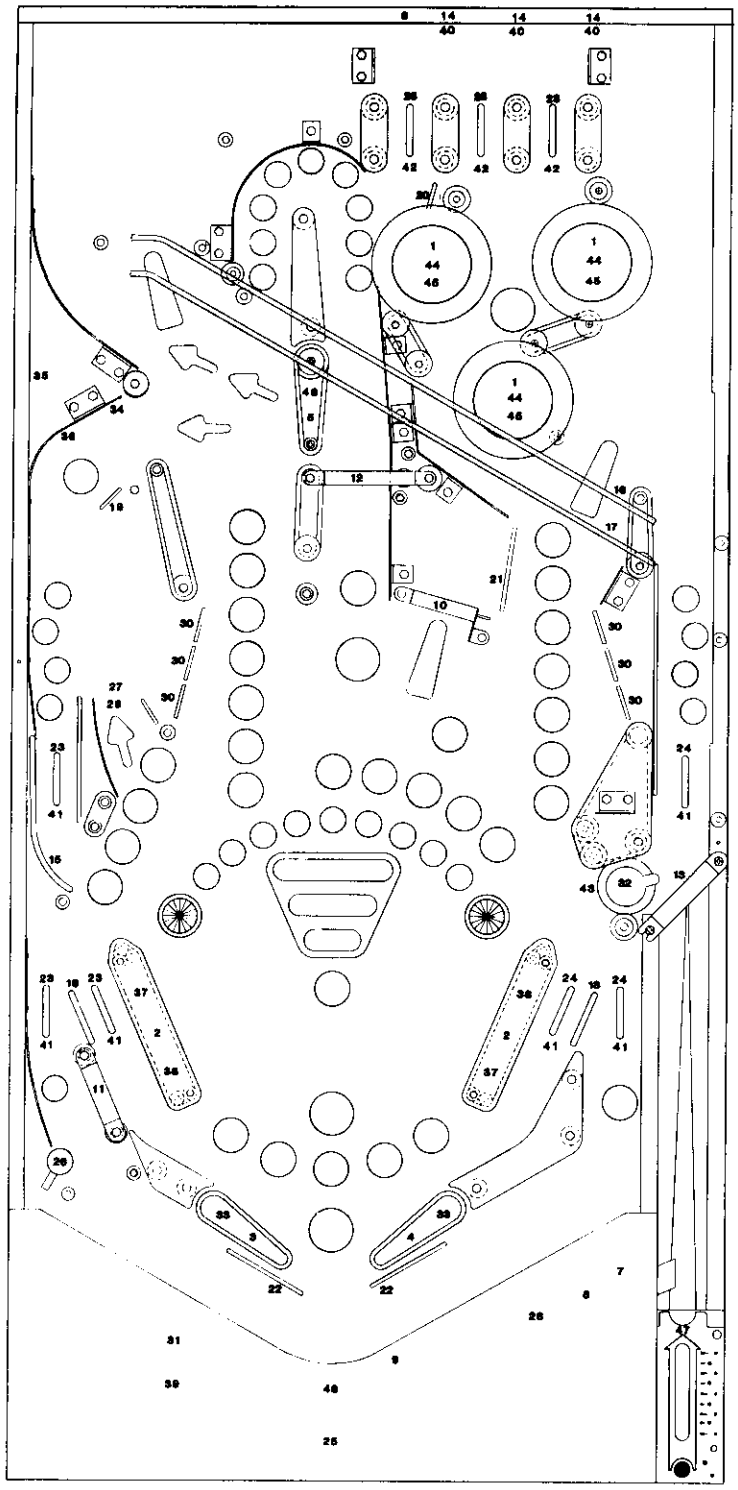

FIGURE II b

OE35 STRANGE SCIENCE
PANEL TOP PARTS (WITHOUT RAMPS)

1.	THUMPER BUMPER	A967-00053-0100
2.	SLINGSHOT KICKER ASSY.	A967-00059-0000
3.	FLIPPER ASSY. SINGE SW. LT.	AC70-00022-0200
4.	FLIPPER ASSY. SINGE SW. RT.	AC70-00022-0100
5.	FLIPPER ASSY. DOUBLE SW. RT.	AC70-00023-0100
6.	BACKBOARD ASSY.	AE35-00021-0000
7.	BALL GATE ASSY.	AA40-00019-0000
8.	BALL CHANNEL GATE ASSY.	AA40-00027-0000
9.	BOTTOM ARCH EXTENSION	0370-00918-0300
10.	OFFSET GATE ASSY.	AE35-00020-0000
11.	GATE BRACKET & WIRE-FORM ASSY.	AE35-00053-0000
12.	GATE BRACKET & WIRE-FORM ASSY.	A360-00214-0000
13.	GATE BRACKET & WIRE-FORM ASSY.	A391-00029-0000
14.	ROLLOVER-WIRE & BRACKET ASSY.	AE35-00024-0000
15.	WIRE: BALL GUIDE	0E35-00918-0000
16.	WIRE-FORM FRONT GUIDE	0E35-00920-01XF
17.	WIRE-FORM REAR GUIDE	0E35-00920-02XF
18.	WIRE-FORM BALL GUIDE	0360-00175-5300
19.	WIRE-FORM BALL GUIDE	0365-00151-2375
20.	WIRE-FORM BALL GUIDE	0365-00151-4000
21.	WIRE-FORM BALL GUIDE	0365-00151-6000
22.	WIRE-FORM	0365-00157-0000
23.	WIRE ACTUATOR W/BRKT. ASSY. LT.	A331-00042-0000
24.	WIRE ACTUATOR W/BRKT. ASSY. RT.	A360-00216-0000
25.	WIRE ACTUATOR W/BRKT. ASSY. LT.	A360-00217-0000
26.	KICKER POST ASSY.	AE35-00012-0000
27.	5-BALL CHANNEL & SWITCH ASSY.	AE35-00013-0000
28.	FRONT-BALL CHANNEL ASSY.	AE35-00016-0000
29.	BALL-STOP & COIL ASSY.	AE35-00043-0000
30.	TARGET ASSY. W/MTG. BRACKET (YELLOW)	AE35-00056-0000
31.	TOP-MTG. KICKER ASSY.	A360-00234-0000
32.	EJECT HOLE ASSY.	A360-00295-0000
33.	MOLDED FLIPPER ASSY. (BLACK)	A967-00031-0100
34.	SWITCH & WIRE ASSY.	AE35-00030-0000
35.	MICRO-SWITCH & BRKT. ASSY.	AE35-00031-0000
36.	SWITCH & WIRE ASSY.	AE35-00032-0000
37.	SLINGSHOT SWITCH & BRACKET ASSY.	A360-00230-0000
38.	SWITCH & DIODE ASSY.	A360-00239-0000
39.	SWITCH & DIODE ASSY. (OUTHOLE)	A360-00241-0000
40.	SWITCH, DIODE & PLATE ASSY. W/CAP	A360-00245-0100
41.	SWITCH, DIODE & PLATE ASSY.	A365-00035-0000
42.	SWITCH, DIODE & PLATE ASSY. W/CAP	A365-00035-0100
43.	SWITCH, DIODE & PLASTIC ASSY. (EJECT HOLE)	A365-00036-0000
44.	THUMPER BUMPER CAP ASSY.	AE35-00050-0000
45.	COLLAR: THUMPER BUMPER (RED)	0017-00042-0566
46.	MOLDED FLIPPER ASSY. (WHITE)	A967-00031-0000
47.	SHOOTER GAUGE	OE35-00142-00XF
48.	BOTTOM ARCH.	OE35-00922-00XF

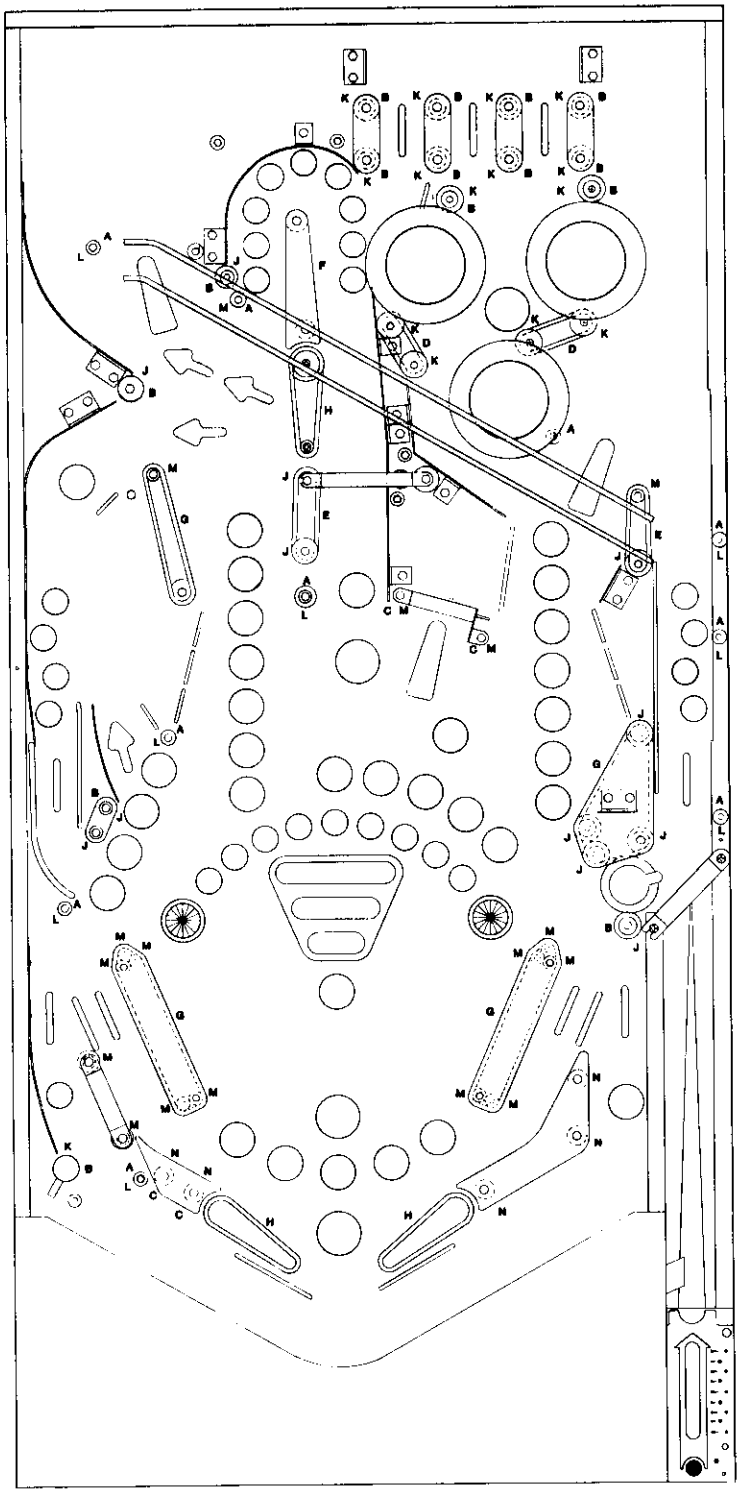

FIGURE II c

OE35 STRANGE SCIENCE XII

RAMP PARTS

1.	ANTI-GRAVITY VERTICAL RAMP ASSY. (NOT SHOWN)	AE35-00019-0000
2.	ATOM SMASHER MULTI-BALL RAMP ASSY. (NOT SHOWN)	AE35-00028-0000
3.	RAMP & COVER ASSY. (NOT SHOWN)	AE35-00033-0000
4.	DRAIN ASSY. LEFT (NOT SHOWN)	AE35-00035-0000
5.	ATOM SMASHER FRONT ENTRANCE ASSY. (NOT SHOWN)	AE35-00036-0000
6.	ATOM SMASHER REAR ENTRANCE ASSY. (NOT SHOWN)	AE35-00037-0000
7.	BUBBLE BONUS ASSY.	AE35-00038-0000

RUBBER RINGS

A.	RING:	0017-00041-0633
B.	RING: 5/16"	0017-00041-0637
C.	RING: 15/64"	0017-00041-0641
D.	RING: 1"	0017-00041-0643
E.	RING: 1-1/2"	0017-00041-0644
F.	RING: 2"	0017-00041-0645
G.	RING: 2-1/2"	0017-00041-0646
H.	RING: (YELLOW) 3"	0017-00041-0653

POST

J.	POST (BLUE PLASTIC)	0017-00042-0594
K.	POST (RED PLASTIC)	0017-00042-0596
L.	METAL MINI-POST (W/THREADS FOR WOOD)	0360-00732-00XF
M.	NICKEL POST (NO THREADS)	0360-00733-00XF
N.	METAL MINI-POST (W/THREADS FOR 10-32 NUT)	0365-00700-00XF

RUBBER BUMPER FOR

L&N—METAL MINI-POST	0017-00041-0633
J&K—PLASTIC POST	0017-00041-0637
M —NICKEL POST	0017-00041-0641

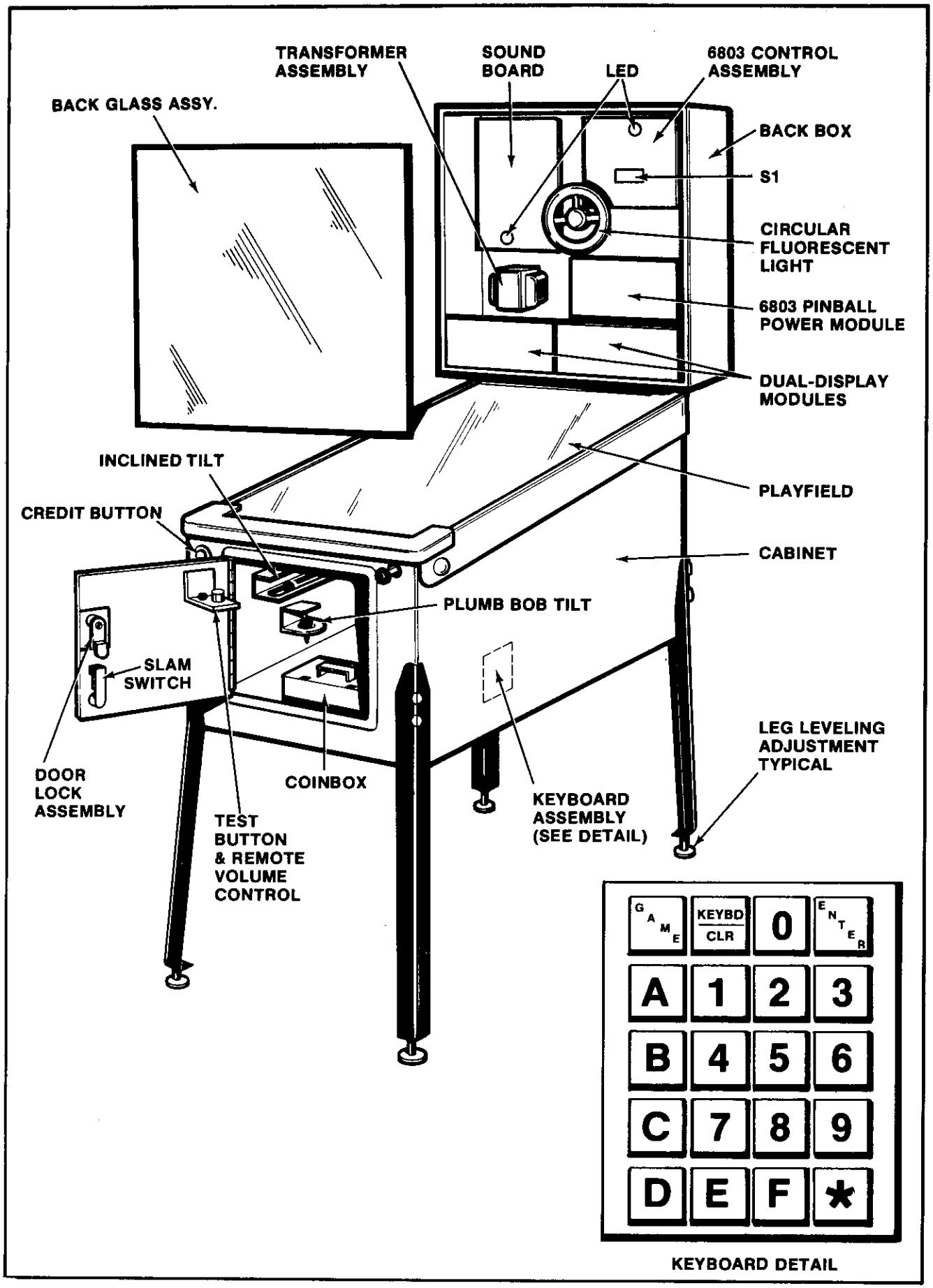

FIGURE III. ELECTRONIC PIN BALL MACHINE

SECTION 2

Component Layouts, Schematics & Wiring Diagrams

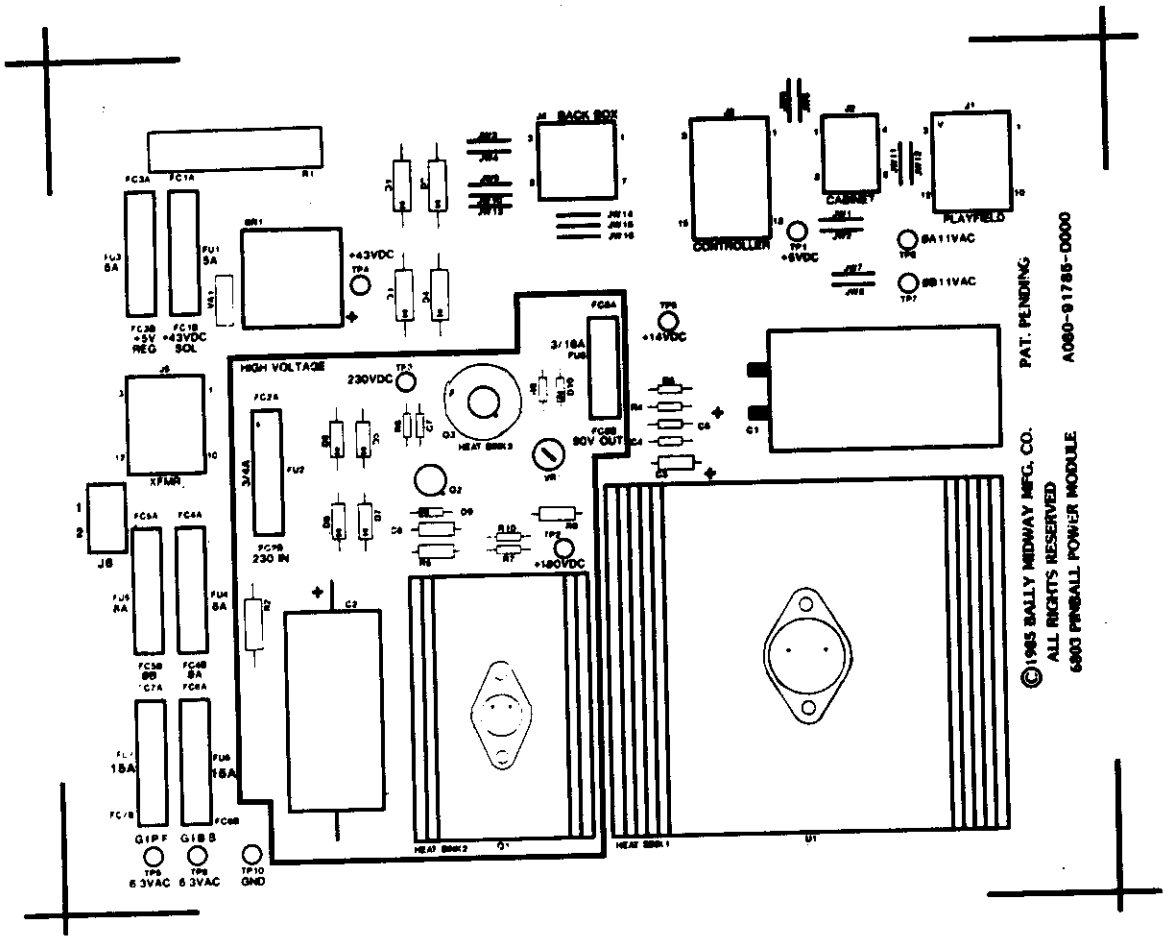

THIS DWG IS CONFIDENTIAL & PROPERTY OF MIDWAY MFG. CO

DIM. TOLERANCES UNLESS OTHERWISE SPEC. CONCENTRICITY T.I.R. .002 FRACTIONAL ± 1/64 DECIMAL ± .005 HOLE DIA. + .002 − .000 ANGLE ± 1/2° DO NOT SCALE DWG.	FIRST USED ON / DRW CL / DATE 04/08/86 / SCALE / MECH CHK / MAT'L / ELEC CHK / FINISH	MIDWAY MFG. CO. FRANKLIN PK., IL. 60131 A BALLY CO	REVISIONS
		ASSY DRAWING 6803 PINBALL PWR MODULE A084-91785-D000	PART NO. M0-5-1-0-0-C-5-3-D-0-0-1

DESIGNATI

DESIGNATI

C1
P/O C1
P/O C1
P/O C1
C2
P/O C2
C3
C4, C5
C6, C7
R1
R2
R3
R4
R5
R6
R7
R8
R9
R10
VR1
D1 - D4
D5 - D9
D10
BR1
P/O BR1
Q1
P/O Q1
P/O Q1
P/O Q1
P/O Q1
P/O Q1
P/O Q1
P/O Q1
P/O Q1
P/O Q1
P/O Q1
P/O Q1
Q2, Q3
P/O Q2,
P/O Q3
U1
P/O U1
P/O U1
P/O U1
P/O U1
P/O U1
P/O U1
VA1

6803 PINBALL POWER MODULE
A084-91785-D000
M051-00C53-D001

ON LIST

ON	DESCRIPTION	DESIGNATION	DESCRIPTION
	11,000uf 20V ELEC.	JW1 - JW16	ZERO OHM RES. JUMPER
	TY-WRAP	TP1 - TP10	TEST POINTS
	SOLDER LUG	F1*	5 AMP 3AG FUSE
	WIRE 20AWG	F2	3/4 AMP 3AG FUSE
	160uf 350V ELEC.	F3	6 AMP 3AG FUSE
	TY-WRAP	F4, F5	8 AMP 3AG FUSE
	2uf 25V ELEC.	F6, F7	15 AMP 3AG FUSE
	.1uf 25V CER.	F8	3/16 AMP 8AG FUSE
	.01uf 500V CER.	FC1A - FC3B, FC8A	FUSE CLIPS
	600 OHM 10W	FC8B	
	100K 1W 5%	FC4A - FC7B	FUSE CLIPS
	2.2 OHM 1/4W 5%	J1	12 PIN M-N-L CONN. FEMALE
	100 OHM 1/2W 5%	J2	6 PIN M-N-L CONN. MALE
	22K 1/2W 5%	J3	15 PIN M-N-L CONN. MALE
	100K 1/4W 5%	J4	9 PIN M-N-L CONN. MALE
	390 OHM 1/4W 5%	J5	12 PIN M-N-L CONN. MALE
	1.2K 1/4W 5%	J6	2 PIN M-N-L CONN. MALE
	82K 1/2W 5%	6803 POWER MODULE	P.C. BOARD
	8.2K 1/4W 5%		
	0 - 25K 1/4W POT.	4-23-86 REV. 1.0 FIXED R2, R6	
	MR751		
	IN4004		
	IN5275A ZENER		
	KBPC-35-02-W		
	BRIDGE SPACER		
	2N3584	* TWO FLIPPER GAMES ONLY - SEE SCHEMATIC	
	SHIELD		
	HEX SPACER		
	6-32 X 5 SCREW		
	6-32 X 12 SCREW		
	LOCKWASHER EXT.		
	LOCKWASHER INT.		
	FLAT WASHER		
	6-32 HEX NUT		
	LABEL - CAUTION HIGH VOLT.		
	HEATSINK 2		
	INSULATOR TO-66		
	2N3440		
3	INSULATOR TO-5		
	HEATSINK 3		
	78H05C REG.		
	6-32 X 12 SCREW		
	6-32 HEX NUT		
	LOCKWASHER EXT.		
	FLAT WASHER		
	HEATSINK 1		
	INSULATOR TO-3		
	VARISTOR		

6803 PINBALL POWER MODULE
A084-91785-D000
M051-00C53-D001

CROSS REFERENCE LIST

DESCRIPTION	QTY.	DESIGNATION NO.	PART NOS.
.01UF 500V CER.	2	C6,C7	0360-00800-0013
.1UF 25V CER.	2	C4,C5	0360-00800-0026
2UF 25V ELEC.	1	C3	0360-00800-0019
160UF 350V ELEC.	1	C2	0360-00800-0020
11,000UF 20V ELEC.	1	C1	0360-00800-0024
2.2 OHM 1/4W 5%	1	R3	100E-00005-0003
100 OHM 1/2W 5%	1	R4	100E-00006-0021
390 OHM 1/4W 5%	1	R7	100E-00005-0049
600 OHM 10W 10%	1	R1	100E-00002-0049
1.2K 1/4W 5%	1	R8	100E-00005-0063
8.2K 1/4W 5%	1	R10	100E-00005-0086
22K 1/2W 5%	1	R5	100E-00006-0065
82K 1/2W 5%	1	R9	100E-00006-0072
100K 1/4W 5%	1	R6	100E-00005-0115
100K 1W 5%	1	R2	100E-00007-0037
0-25K 1/4W POT	1	VR1	0360-00804-0004
MR 751	4	D1-D4	103E-00003-0016
1N4004	5	D5-D9	103E-00003-0005
1N5275	1	D10	103E-00001-0027
KBPC-35-02-W	1	BR1	103E-00005-0005
2N3440	2	Q2,Q3	104E-00003-0002
2N3584	1	Q1	104E-00005-0002
78H05C REG	1	U1	0360-00803-0021
VARISTOR METAL OXIDE 60V	1	VA1	115E-00001-0002
TY-WRAP	4	P/O C1,C2	0017-00042-0048
ZERO OHM RES. JUMPER	16	JW1-JW16	117E-00001-0001
TEST POINTS	10	TP1-TP10	0017-00007-0131
SOLDER LUG	2	P/O C1	0017-00021-0257
JUMPER WIRE 20AWG	2	P/O C1	0017-00033-0448
INSULATOR TO-3	1	P/O U1	0017-00042-0119
INSULATOR TO-5	2	P/O Q2,Q3	0017-00042-0151
INSULATOR TO-66	1	P/O Q1	0017-00042-0158
HEX SPACER	2	P/O Q1	0017-00042-0248
SHIELD	1	P/O Q1	0365-00952-0000
HEATSINK 1	1	P/O U1	112E-00001-0003
HEATSINK 2	1	P/O Q1	112E-00001-0002
HEATSINK 3	1	P/O Q3	112E-00001-0004
BRIDGE SPACER	1	P/O BR1	118E-00001-0001
6-32 X 12 SCREW	4	P/O Q1,U1	0017-00101-0132
6-32 X 5 SCREW	2	P/O Q1	0017-00101-0555
6-32 HEX NUT	4	P/O Q1,U1	0017-00103-0005
LOCKWASHER INT.	4	P/O Q1,	0017-00104-0008
LOCKWASHER EXT.	4	P/O Q1,U1	0017-00104-0009
FLAT WASHER	4	P/O Q1,U1	0017-00104-0106
FUSE CLIP	8	FC1A-FC3B, FC8A,FC8B	0017-00071-0033
FUSE CLIP	8	FC4A-FC7A	0017-00071-0034
3/16 AMP 8AG FUSE	1	F8	0017-00003-0206
3/4 AMP 3AG FUSE	1	F2	0017-00003-0010
5 AMP 3AG FUSE	1	F1*	0017-00003-0175
6 AMP 3AG FUSE	1	F3	0017-00003-0008

CROSS REFERENCE LIST

DESCRIPTION	QTY.	DESIGNATION NO.	PART NOS.
8 AMP 3AG FUSE	2	F4,F5	0017-00003-0387
15 AMP 3AG FUSE	2	F6,F7	0017-00003-0011
12 PIN M-N-L CONN. FEMALE	1	J1	0017-00021-0532
6 PIN M-N-L CONN. MALE	1	J2	0017-00021-0424
15 PIN M-N-L CONN. MALE	1	J3	0017-00021-0434
9 PIN M-N-L CONN. MALE	1	J4	0017-00021-0425
12 PIN M-N-L CONN. MALE	1	J5	0017-00021-0426
2 PIN M-N-L CONN. MALE	1	J6	0017-00021-0488
6803 POWER MODULE P.C.B.	1		A080-91785-D000

* TWO FLIPPER GAMES ONLY - SEE SCHEMATIC

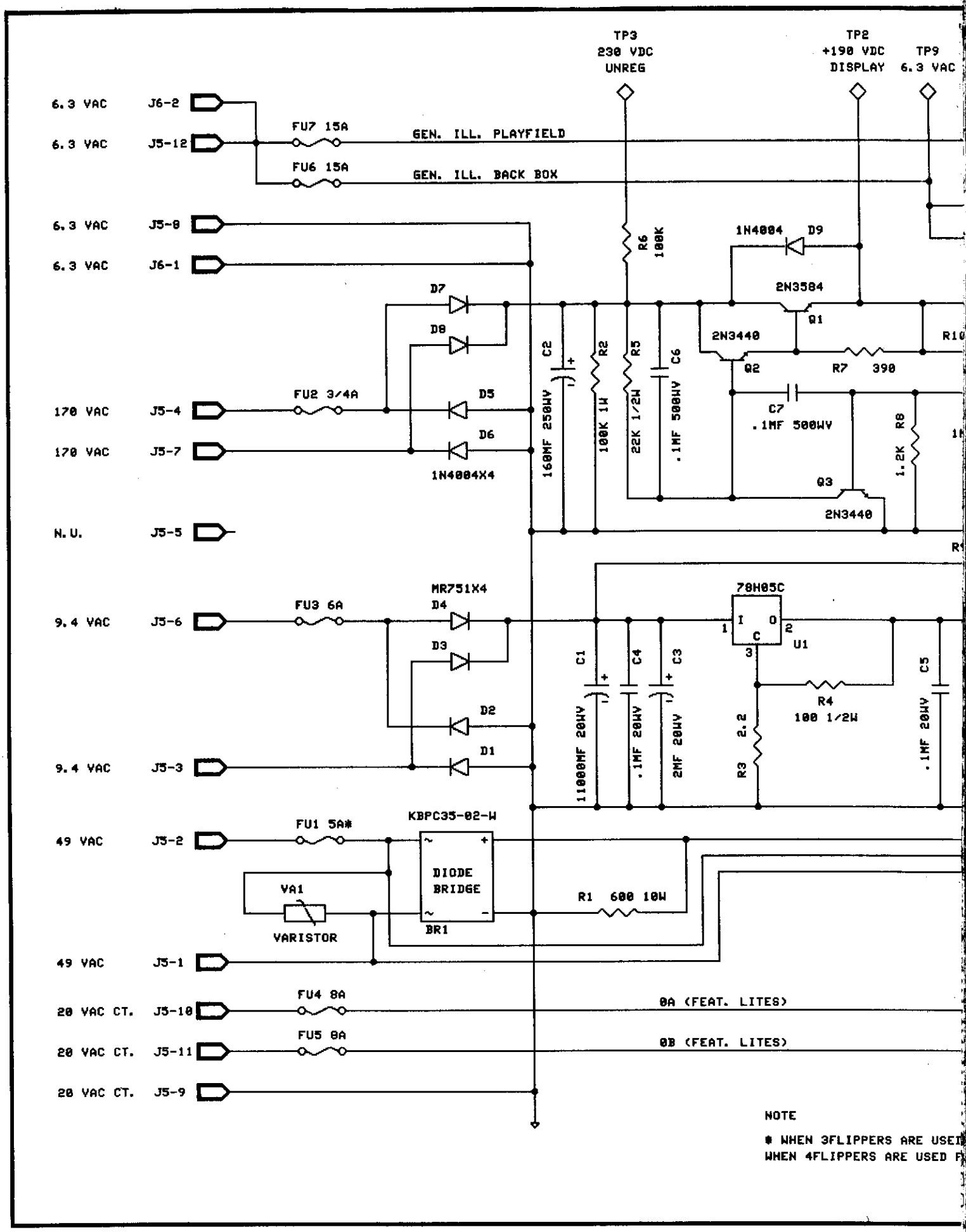
TP3
230 VDC
UNREG
TP2
+190 VDC
DISPLAY
TP9
6.3 VAC
6.3 VAC J6-2
6.3 VAC J5-12
FU7 15A
GEN. ILL. PLAYFIELD
FU6 15A
GEN. ILL. BACK BOX
6.3 VAC J5-8
6.3 VAC J6-1
R6
100K
1N4004 D9
2N3584
Q1
D7
D8
2N3440
Q2
R7 390
R10
C2
160MF 250WV
R2
100K 1W
R5
22K 1/2W
C6
.1MF 500WV
FU2 3/4A
D5
170 VAC J5-4
170 VAC J5-7
D6
1N4004X4
C7
.1MF 500WV
R8
1.2K
Q3
2N3440
N.U. J5-5
MR751X4
D4
FU3 6A
9.4 VAC J5-6
D3
D2
D1
9.4 VAC J5-3
78H05C
U1
C1
11000MF 20WV
C4
.1MF 20WV
C3
2MF 20WV
R3
2.2
R4
100 1/2W
C5
.1MF 20WV
FU1 5A*
KBPC35-02-W
49 VAC J5-2
DIODE
BRIDGE
BR1
VA1
VARISTOR
R1 600 10W
49 VAC J5-1
FU4 8A
20 VAC CT. J5-10
0A (FEAT. LITES)
FU5 8A
20 VAC CT. J5-11
0B (FEAT. LITES)
20 VAC CT. J5-9
NOTE
* WHEN 3FLIPPERS ARE USE
WHEN 4FLIPPERS ARE USED

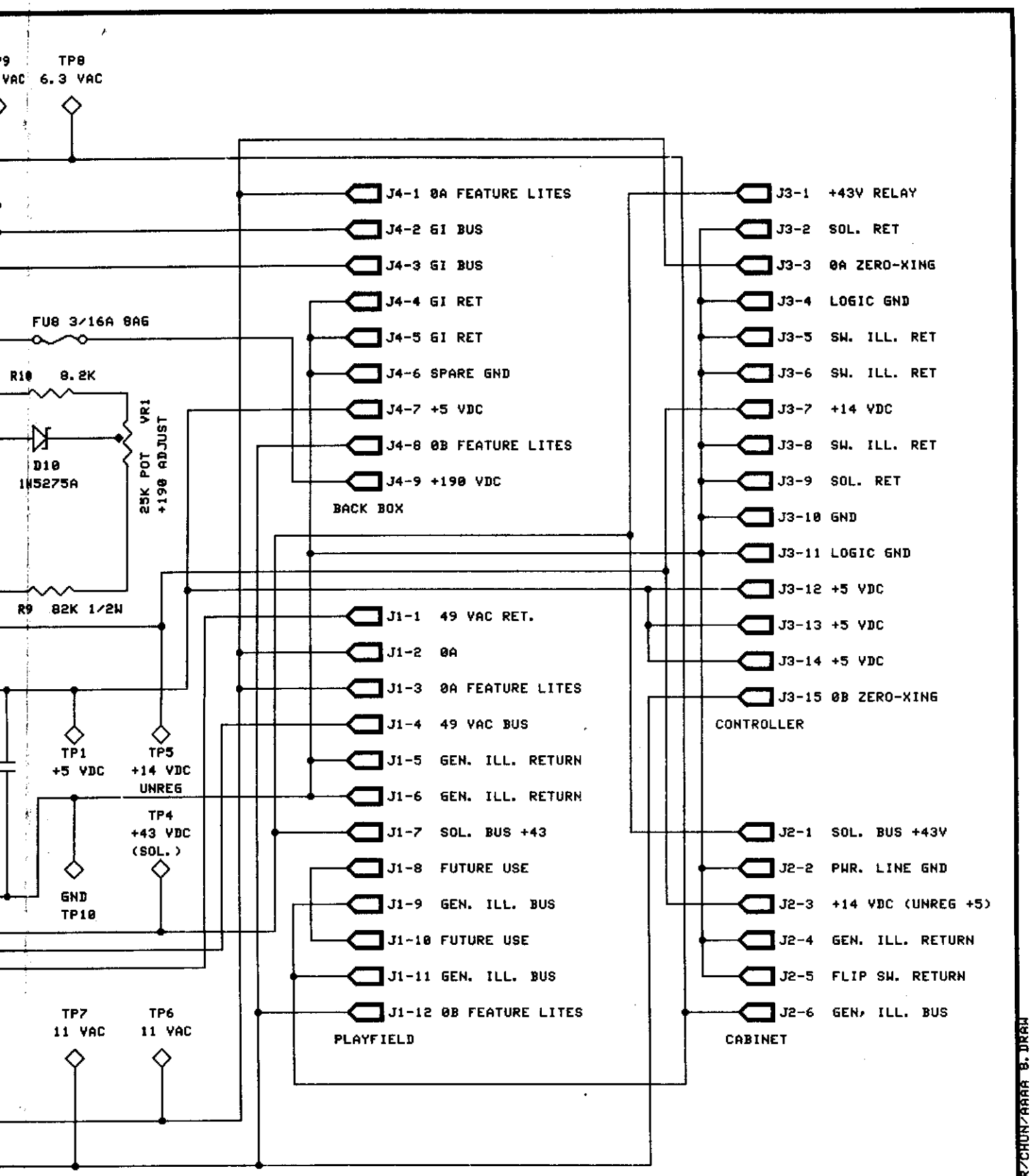

USED FU1 SHOULD BE 6AMP
ED FU1 SHOULD BE 7AMP

NOTES: R. KOHAN	BALLY MIDWAY MFG. CO.	
1PER	6803 PINBALL PWR MODULE	
03/11/86	SCHEMATIC DRAWING	
	A084-91785-D000	
	M051-00C53-D002	
	SHEET 1 OF 1	REV

22 APR 86 10:47 /USER/CHUN/AAAA B.DRAW

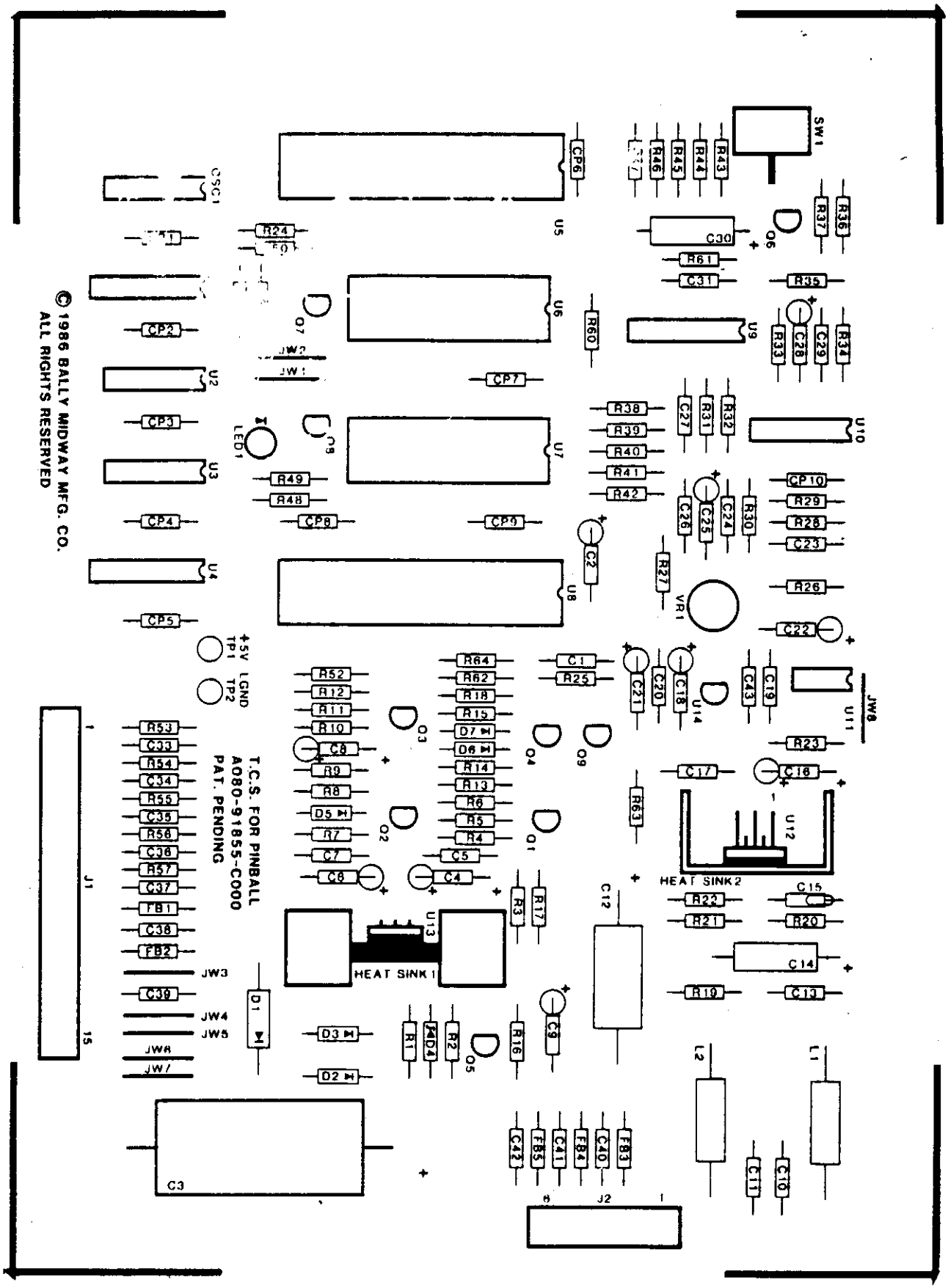

DESIGNATION	
DESIGNATION	
C1	
C2	
C3	
C4	
C5	
C6	
C7	
C8	
C9	
C10,C11	
C12	
C13	
C14	
C15	
C16	
C17	
C18-C22	
C23	
C24	
C25	
C26	
C27	
C28	
C29	
C30	
C31	
C32	
C33-C36	
C37	
C38,C39	
C40-C43	
CP1-CP10	
R1	
R2,R3	
R4	
R5	
R6	
R7	
R8	
R9	
R10,R11	
R12	
R13	
R14	
R15	

A084 - 91855 - C000
M051 - 00114 - C146

T.C.S. FOR PINBALL
A084-91855-C000
M051-00114-C146

LIST

NO.	DESCRIPTION
	NOT INSERTED
	10 UF 20V TANT
	4700 UF 25V AX ELEC
	4.7 UF 25V TANT
	.01 UF 50V AX CER
	4.7 UF 25V TANT
	.01 UF 50V AX CER
	6.8 UF 25V TANT
	NOT INSERTED
	.22 UF 50V AX CER
	1000 UF 16V AX ELEC
	.1 UF 50V AX CER
	470 UF 6V AX ELEC
	.05 UF CER
	1 UF 20V TANT
	.1 UF 50V AX CER
	NOT INSERTED
	150 PF 50V AX CER
	270 PF 50V AX CER
	1 UF 20V TANT
	470 PF 50V AX CER
	.003 UF 50V AX CER
	1 UF 20V TANT
	270 PF 50V AX CER
	47 UF 16V AX ELEC
	.01 UF 50V AX CER
	18 PF 50V AX CER
	100 PF 50V AX CER
	470 PF 50V AX CER
	.1 UF 50V AX CER
	NOT INSERTED
	.01 UF 50V AX CER
	1K OHM 1/4W 5% CRBN.
	2.7K OHM 1/4W 5% CRBN.
	7.5K OHM 1/4W 5% CRBN.
	39K OHM 1/4W 5% CRBN.
	9.1K OHM 1/4W 5% CRBN.
	82 OHM 1/4W 5% CRBN.
	100 OHM 1/4W 5% CRBN.
	47K OHM 1/4W 5% CRBN.
	10K OHM 1/4W 5% CRBN.
	82K OHM 1/4W 5% CRBN.
	62K OHM 1/4W 5% CRBN.
	5.6K OHM 1/4W 5% CRBN.
	910 OHM 1/4W 5% CRBN.

DESIGNATION LIST

DESIGNATION NO.	DESCRIPTION
R16-R18	NOT INSERTED
R19	1 OHM 1/4W 5% CRBN.
R20	430 OHM 1/4W 5% CRBN.
R21	2.2 OHM 1/4W 5% CRBN.
R22	220 OHM 1/4W 5% CRBN.
R23	NOT INSERTED
R24	4.7K OHM 1/4W 5% CRBN.
R25	NOT INSERTED
R26	5.1K OHM 1/4W 5% CRBN.
R27	0 OHM RESISTOR (JUMPER WI
R28	150K OHM 1/4W 5% CRBN.
R29	82K OHM 1/4W 5% CRBN.
R30	150K OHM 1/4W 5% CRBN.
R31	33K OHM 1/4W 5% CRBN.
R32	18K OHM 1/4W 5% CRBN.
R33	33K OHM 1/4W 5% CRBN.
R34	120K OHM 1/4W 5% CRBN.
R35	62K OHM 1/4W 5% CRBN.
R36	68 OHM 1/4W 5% CRBN.
R37	180 OHM 1/4W 5% CRBN.
R38	75K OHM 1/4W 5% CRBN.
R39	47K OHM 1/4W 5% CRBN.
R40	200K OHM 1/4W 5% CRBN.
R41-R47	4.7K OHM 1/4W 5% CRBN.
R48	47K OHM 1/4W 5% CRBN.
R49	100 OHM 1/4W 5% CRBN.
R50	150 OHM 1/4W 5% CRBN.
R51	3.3K OHM 1/4W 5% CRBN.
R52	100K OHM 1/4W 5% CRBN.
R53-R57	10K OHM 1/4W 5% CRBN.
R58,R59	NOT USED
R60	1K OHM 1/4W 5% CRBN.
R61	2.7K OHM 1/4W 5% CRBN.
R62-R64	NOT INSERTED
VR1	1K OHM POT
L1,L2	10 UH INDUCTOR
D1	VR330 DIODE
D2,D3	1N4004 DIODE
D4	1N958B DIODE
D5-D7	1N4606 DIODE
LED 1	GREEN LED

DESIGNATION LIST

DESIGNATION NO.	DESCRIPTION
Q1	2N3904 XSTR.
Q2	2N4403 XSTR.
Q3	2N3904 XSTR.
Q4	2N4403 XSTR.
Q5	NOT INSERTED
Q6	2N5305 XSTR.
Q7	MPS3646 XSTR.
Q8	2N5305 XSTR.
Q9	NOT INSERTED
OSC1	8 MHZ COSC
IC U1	74LS76
IC U2	74LS00
IC U3	74LS02
IC U4	74LS139
IC U5	MC68B09E
IC U6	6116 2KX8 RAM 200NS.
IC U7	PROG EPROM 128K 250NS.
IC U8	MC68B21
IC U9	AD7533
IC U10	LM3900
IC U11	NOT INSERTED
IC U12	TDA2002
IC U13	MC7805
IC U14	NOT INSERTED
ICS U5	40 PIN IC SOCKET (.600)
ICS U6,U7	28 PIN IC SOCKET (.600)
ICS U8	40 PIN IC SOCKET (.600)
ICS U9	16 PIN IC SOCKET (.300)
HS U12	6030B-TT HEAT SINK
HS U13	6100B HEAT SINK
MH U12	1 SCREW, 1 WASHER, 1 NUT
MH U13	1 SCREW, 1 WASHER, 1 NUT
INS U12, U13 SIL PAD THERMAL WASHER, TO 220	
FB1,FB2	FERRITE BEAD
FB3-FB5	NOT INSERTED
SW1	SWITCH PC. MTG.
JW1-JW8	JUMPER
J1,J2	AUTO INSERT PINS TIN .045 SQ. PIN
TP1,TP2	TEST POINTS
T.C.S. FOR PINBALL	A080-91855-C000

CROSS REFERENCE LIST

DESCRIPTION	QTY.	DESIGNATION NO.	PART NOS.
18 PF 50V AX CER.	1	C32	0365-00800-0026
100 PF 50V AX CER.	4	C33-C36	0360-00800-0046
150 PF 50V AX CER.	1	C23	0360-00800-0053
270 PF 50V AX CER.	2	C24,C29	0307-00800-0009
470 PF 50V AX CER.	2	C26,C37	0307-00800-0008
.003 UF 50V AX CER.	1	C27	0360-00800-0056
.01 UF 50V AX CER.	13	C5,C7,C31,CP1-CP10	0360-00800-0005
.05 UF CER.	1	C15	0360-00800-0006
.1 UF 50V AX CER.	4	C13,C17,C38,C39	0360-00800-0058
.22 UF 50V AX CER.	2	C10,C11	0360-00800-0057
1 UF 20V TANT.	3	C16,C25,C28	0986-00800-1400
4.7 UF 25V TANT.	2	C4,C6	0360-00800-0008
6.8 UF 25V TANT.	1	C8	0360-00800-0048
10 UF 20V TANT.	1	C2	0986-00800-0700
47 UF 16V AX ELEC.	1	C30	0360-00800-0042
470 UF 6V AX ELEC.	1	C14	0360-00800-0021
1000 UF 16V AX ELEC.	1	C12	0360-00800-0044
4700 UF 25V AX ELEC.	1	C3	0360-00800-0023
1 OHM 1/4W 5% CRBN.	1	R19	100E-00005-0002
2.2 OHM 1/4W 5% CRBN.	1	R21	100E-00005-0003
68 OHM 1/4W 5% CRBN.	1	R36	100E-00005-0029
82 OHM 1/4W 5% CRBN.	1	R7	100E-00005-0031
100 OHM 1/4W 5% CRBN.	2	R8,R49	100E-00005-0033
150 OHM 1/4W 5% CRBN.	1	R50	100E-00005-0037
180 OHM 1/4W 5% CRBN.	1	R37	100E-00005-0039
220 OHM 1/4W 5% CRBN.	1	R22	100E-00005-0041
430 OHM 1/4W 5% CRBN.	1	R20	100E-00005-0050
910 OHM 1/4W 5% CRBN.	1	R15	100E-00005-0059
1K OHM 1/4W 5% CRBN.	2	R1,R60	100E-00005-0061
2.7K OHM 1/4W 5% CRBN.	3	R2, R3,R61	100E-00005-0071
3.3K OHM 1/4W 5% CRBN.	1	R51	100E-00005-0074
4.7K OHM 1/4W 5% CRBN.	8	R24,R41-R47	100E-00005-0079
5.1K OHM 1/4W 5% CRBN.	1	R26	100E-00005-0080
5.6K OHM 1/4W 5% CRBN.	1	R14	100E-00005-0082
7.5K OHM 1/4W 5% CRBN.	1	R4	100E-00005-0085
9.1K OHM 1/4W 5% CRBN.	1	R6	100E-00005-0087
10K OHM 1/4W 5% CRBN.	7	R10,R11,R53-R57	100E-00005-0088
18K OHM 1/4W 5% CRBN.	1	R32	100E-00005-0093
33K OHM 1/4W 5% CRBN.	2	R31,R33	100E-00005-0100
39K OHM 1/4W 5% CRBN.	1	R5	100E-00005-0102
47K OHM 1/4W 5% CRBN.	3	R9,R39,R48	100E-00005-0104
62K OHM 1/4W 5% CRBN.	2	R13,R35	100E-00005-0107
75K OHM 1/4W 5% CRBN.	1	R38	100E-00005-0110
82K OHM 1/4W 5% CRBN.	2	R12,R29	100E-00005-0112
100K OHM 1/4W 5% CRBN.	1	R52	100E-00005-0115
120K OHM 1/4W 5% CRBN.	1	R34	100E-00005-0118
150K OHM 1/4W 5% CRBN.	2	R28,R30	100E-00005-0120
200K OHM 1/4W 5% CRBN.	1	R40	100E-00005-0123

CROSS REFERENCE LIST

DESCRIPTION	QTY.	DESIGNATION NO.	PART NOS.
1K OHM POT	1	VR1	0360-00804-0003
10 UH INDUCTOR	2	L1,L2	0360-00804-0031
1N958B DIODE	1	D4	103E-00001-0002
1N4004 DIODE	2	D2,D3	103E-00003-0005
1N4606 DIODE	3	D5-D7	103E-00002-0006
VR330 DIODE	1	D1	0360-00801-0007
LED, GREEN	1	LED1	119E-00001-0001
2N3904	2	Q1,Q3	104E-00001-0006
2N4403	2	Q2,Q4	104E-00002-0006
2N5305	2	Q6,Q8	0360-00802-0012
MPS3646	1	Q7	104E-00001-0019
COSC, 8 MHZ	1	OSC1	119E-00002-0009
6116 2KX8 RAM 200NS.	1	IC U6	0304-00803-0057
74LS00	1	IC U2	0A15-00803-0046
74LS02	1	IC U3	0986-00803-7400
74LS76	1	IC U1	0A15-00803-0072
74LS139	1	IC U4	0A15-00803-0051
AD7533	1	IC U9	0304-00803-0055
LM3900	1	IC U10	0360-00803-0002
MC68B09E	1	IC U5	0C48-00803-0001
MC68B21	1	IC U8	0A15-00803-0074
MC7805	1	IC U13	0360-00803-0050
PROG EPROM	1	U7	SEE ROM/EPROM SHEET
TDA2002	1	IC U12	0360-00803-0009
16 PIN I.C. SOCKET	1	ICS U9	110E-00001-0003
28 PIN I.C. SOCKET	2	ICS U6,U7	110E-00001-0010
40 PIN I.C. SOCKET	2	ICS U5,U8	110E-00001-0011
6030B-TT HEAT SINK	1	HS U12	112E-00001-0011
6100B HEAT SINK	1	HS U13	0360-00804-0032
SCREW, 6-32	1	MH U12	0017-00101-0339
NUT, 6-32	1	MH U12	0017-00103-0005
WASHER, #6 STAR	1	MH U12	0017-00104-0009
SCREW, 4-40	1	MH U13	0017-00101-0731
NUT, 4-40	1	MH U13	0017-00103-0002
WASHER, #4 STAR	1	MH U13	0017-00104-0071
SIL PAD THERMAL WASHER	2	INS U12,U13	0017-00042-0319
FERRITE BEAD	2	FB1,FB2	0316-00804-0002
SWITCH, PC. MTG.	1	SW1	0986-00804-3100

R PINBALL
855-C000
114-C146

DESCRIPTION	QTY.	DESIGNATION NO.	PART NOS.
JUMPER (0 OHM RESISTOR)	9	JW1-JW8,R27	117E-00001-0003
AUTO INSERT PINS TIN .045 SQ. PIN	14	J1	0304-00804-0010
AUTO INSERT PINS TIN .045 SQ. PIN	5	J2	0304-00804-0010
TEST POINTS	2	TP1 TP2	0017-00007-0131
P.C. BOARD			A080-91855-C000

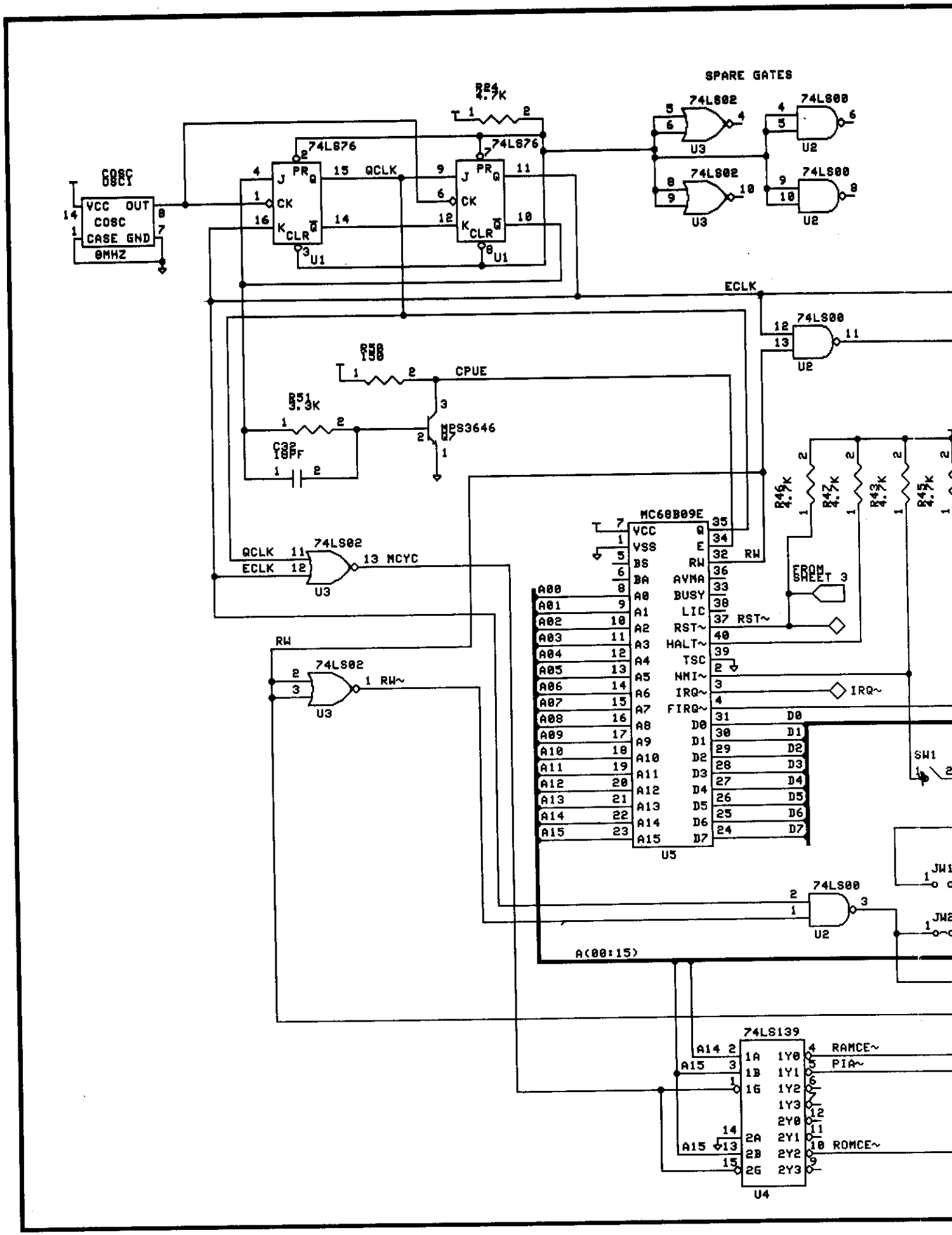
SPARE GATES
COSC
OSCY
VCC OUT
COSC
CASE GND
8MHZ
74LS76
PR Q
J
CK
K CLR Q̄
U1
QCLK
R24
4.7K
74LS02
74LS00
U3
U2
ECLK
R50
150
CPUE
R51
3.3K
C32
18PF
MPS3646
Q7
MC68B09E
VCC
VSS
BS
BA
A0
A1
A2
A3
A4
A5
A6
A7
A8
A9
A10
A11
A12
A13
A14
A15
Q
E
RW
AVMA
BUSY
LIC
RST~
HALT~
TSC
NMI~
IRQ~
FIRQ~
D0
D1
D2
D3
D4
D5
D6
D7
U5
MCYC
RW~
R46
4.7K
R47
4.7K
R43
4.7K
R45
4.7K
FROM SHEET 3
IRQ~
SW1
JW1
JW2
A(00:15)
74LS139
1A
1B
1G
2A
2B
2G
1Y0
1Y1
1Y2
1Y3
2Y0
2Y1
2Y2
2Y3
RAMCE~
PIA~
ROMCE~
U4

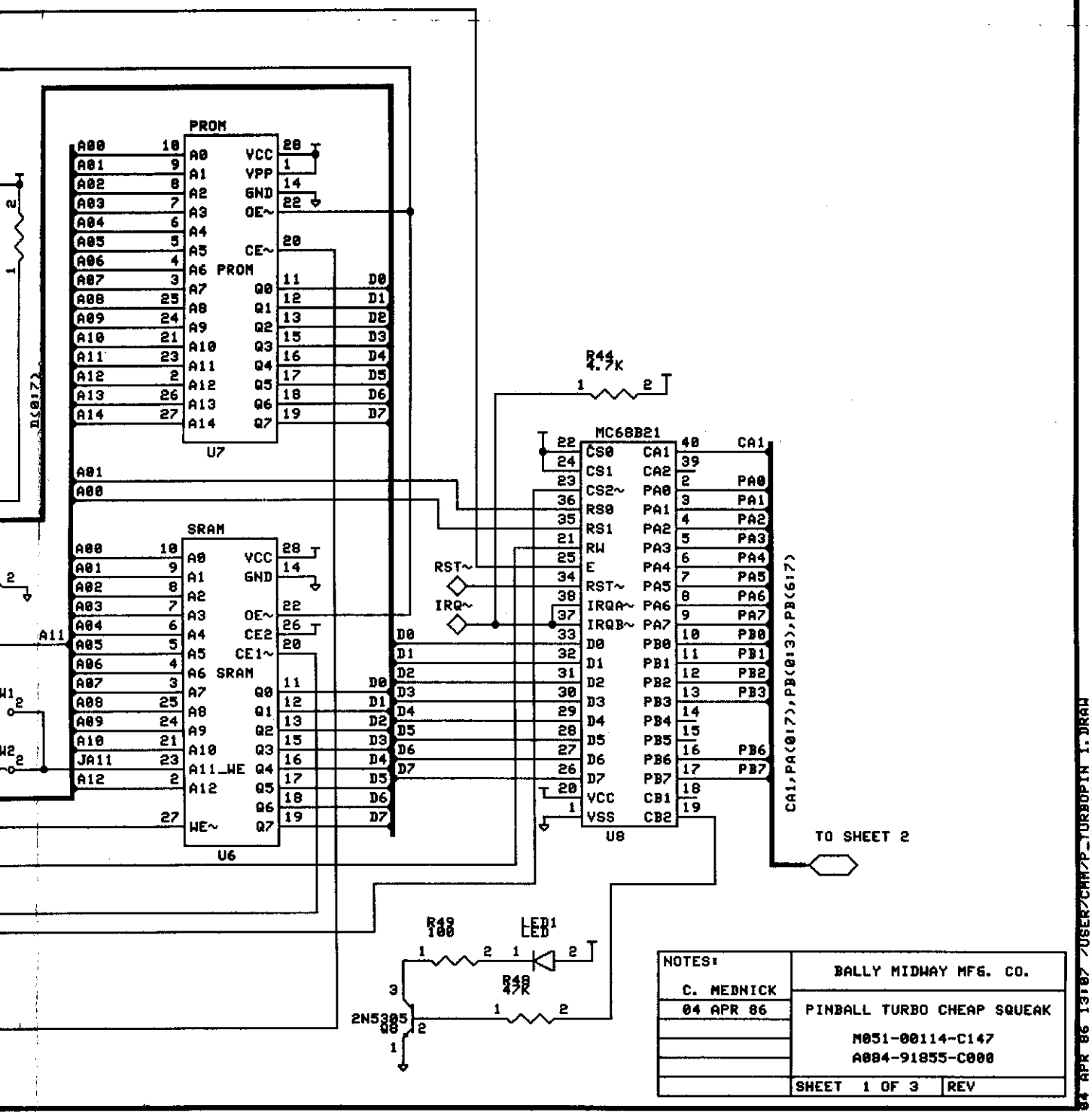
PROM
U7
SRAM
U6
MC68B21
U8
R44
4.7K
RST~
IRQ~
TO SHEET 2
R49
100
LED1
LED
R48
47K
2N5305
Q8
CA1,PA(0:7),PB(0:3),PB(6:7)
D(0:7)
A11
JA11
NOTES:
C. MEDNICK
04 APR 86
BALLY MIDWAY MFG. CO.
PINBALL TURBO CHEAP SQUEAK
M051-00114-C147
A084-91855-C000
SHEET 1 OF 3
REV
04 APR 86 13:07 /USER/CHAP/P_TURBOPIN 1.DRAW

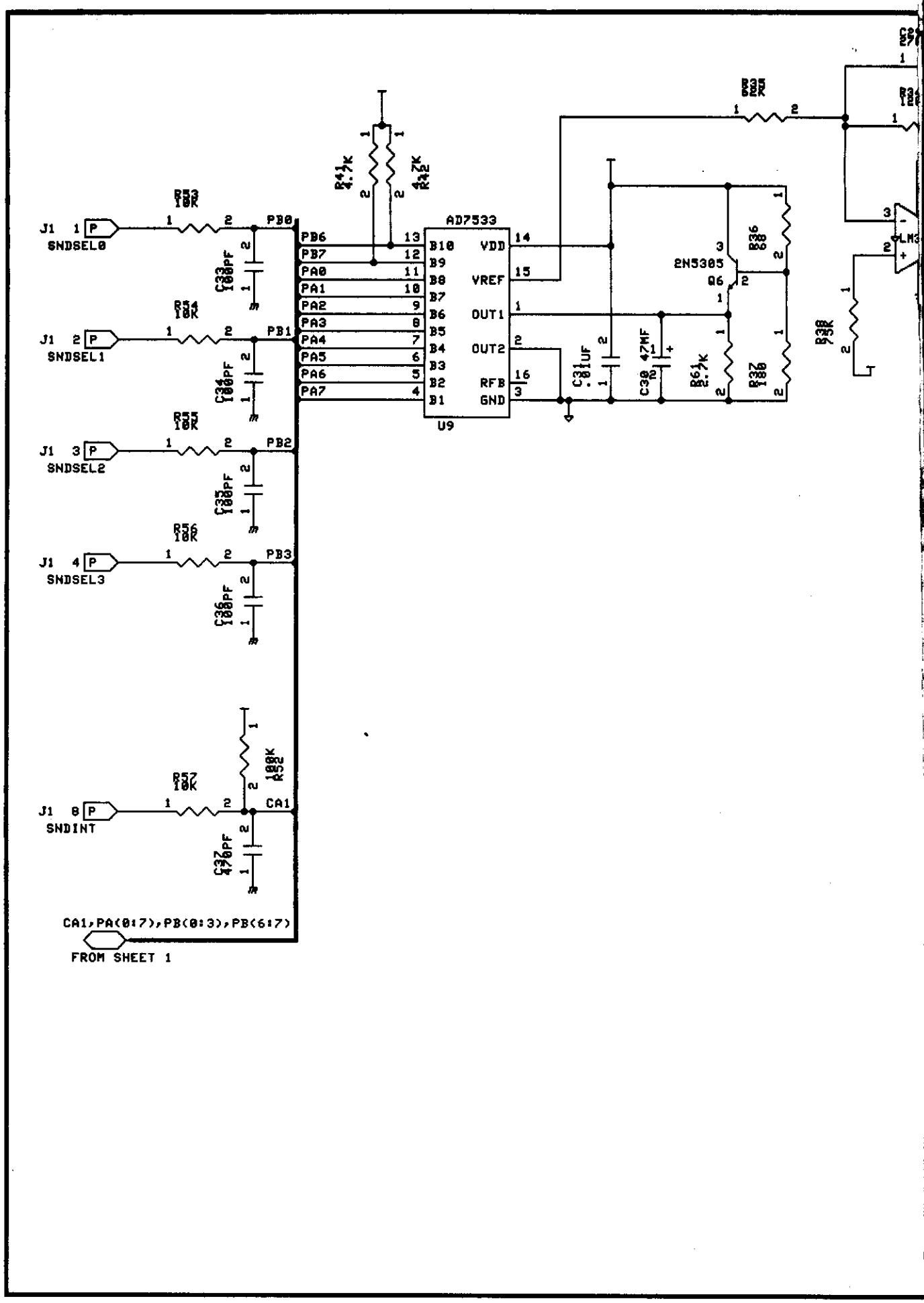
J1 1 P
SNDSEL0
R53 10K
C33 100PF
J1 2 P
SNDSEL1
R54 10K
C34 100PF
J1 3 P
SNDSEL2
R55 10K
C35 100PF
J1 4 P
SNDSEL3
R56 10K
C36 100PF
J1 8 P
SNDINT
R57 10K
C37 470PF
R59 100K
PB0
PB1
PB2
PB3
CA1
CA1,PA(0:7),PB(0:3),PB(6:7)
FROM SHEET 1
R41 4.7K
R42 4.7K
AD7533
U9
PB6
PB7
PA0
PA1
PA2
PA3
PA4
PA5
PA6
PA7
B10
B9
B8
B7
B6
B5
B4
B3
B2
B1
VDD
VREF
OUT1
OUT2
RFB
GND
C31 .01UF
C30 47MF
R61 2.7K
2N5305
Q6
R36 68
R37 180
R35 82K
R38 75K
LM3

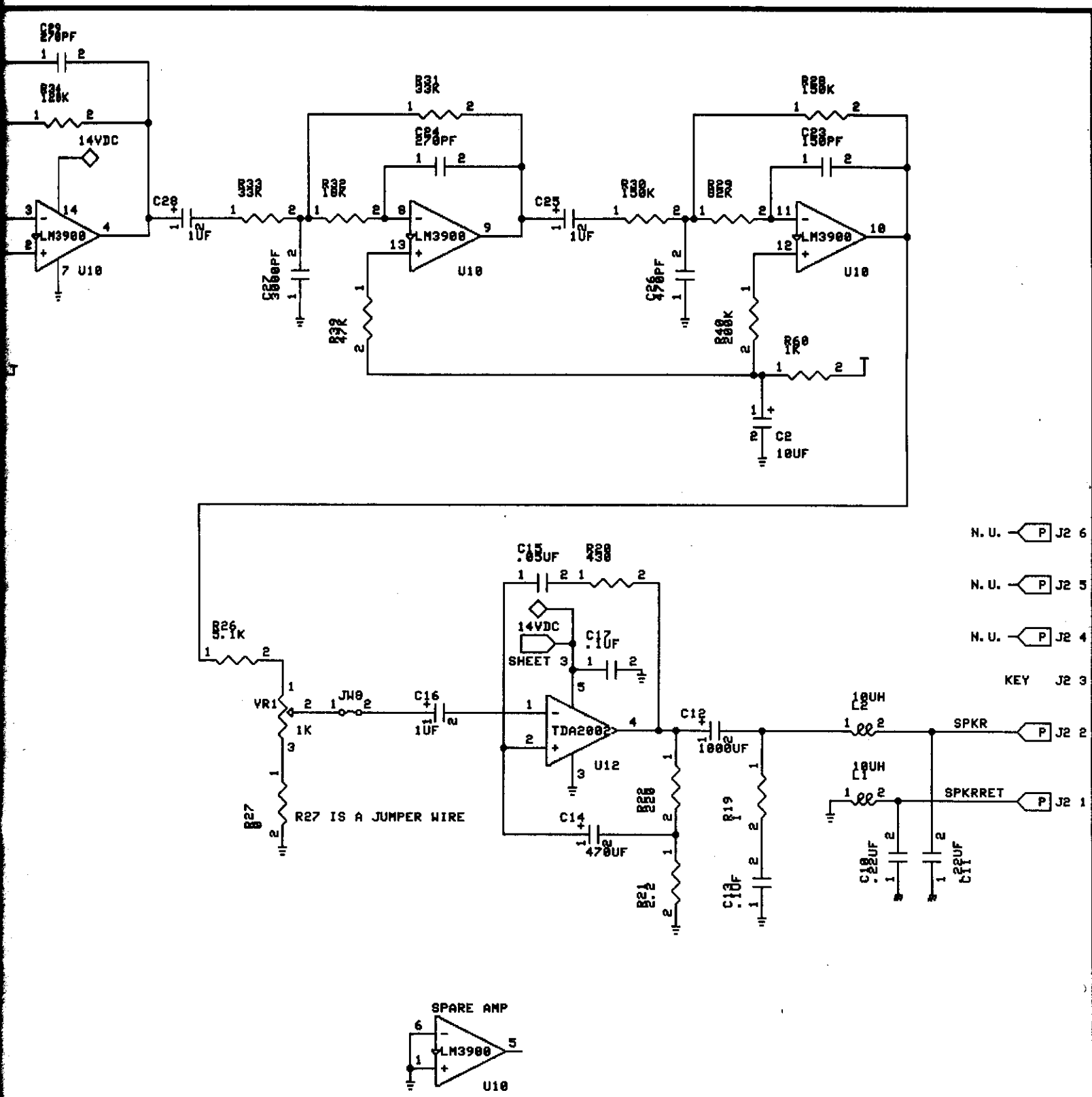

4/22/86 Reversed numbering of J2

NOTES:	BALLY MIDWAY MFG. CO.	
C. MEDNICK		
04 APR 86	PINBALL TURBO CHEAP SQUEAK	
	M051-00114-C147	
	A084-91855-C000	
	SHEET 2 OF 3	REV

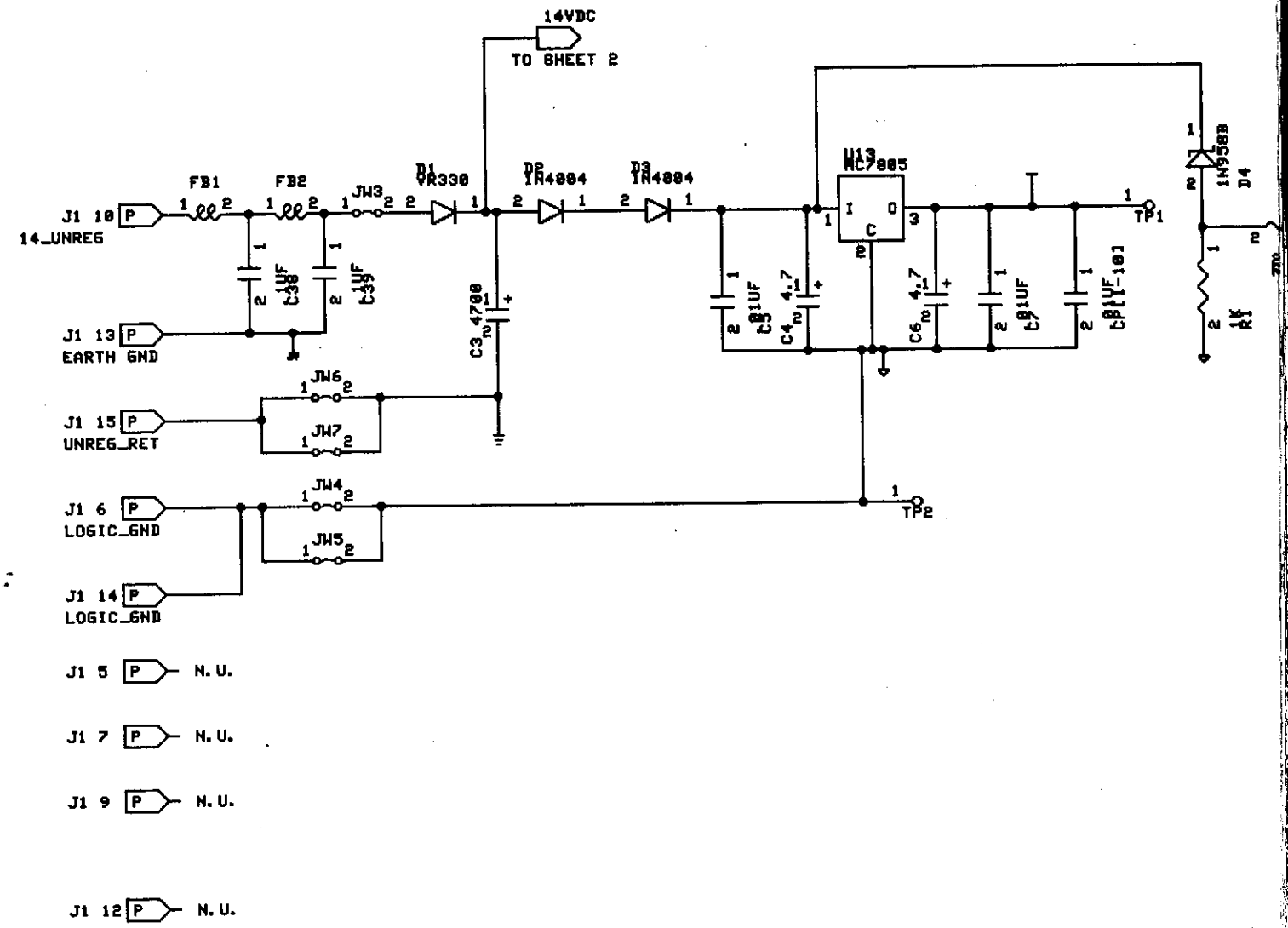

LAST USED: C43,CP1
NOT INSERTED: C1,C
NOT USED: R58,R59

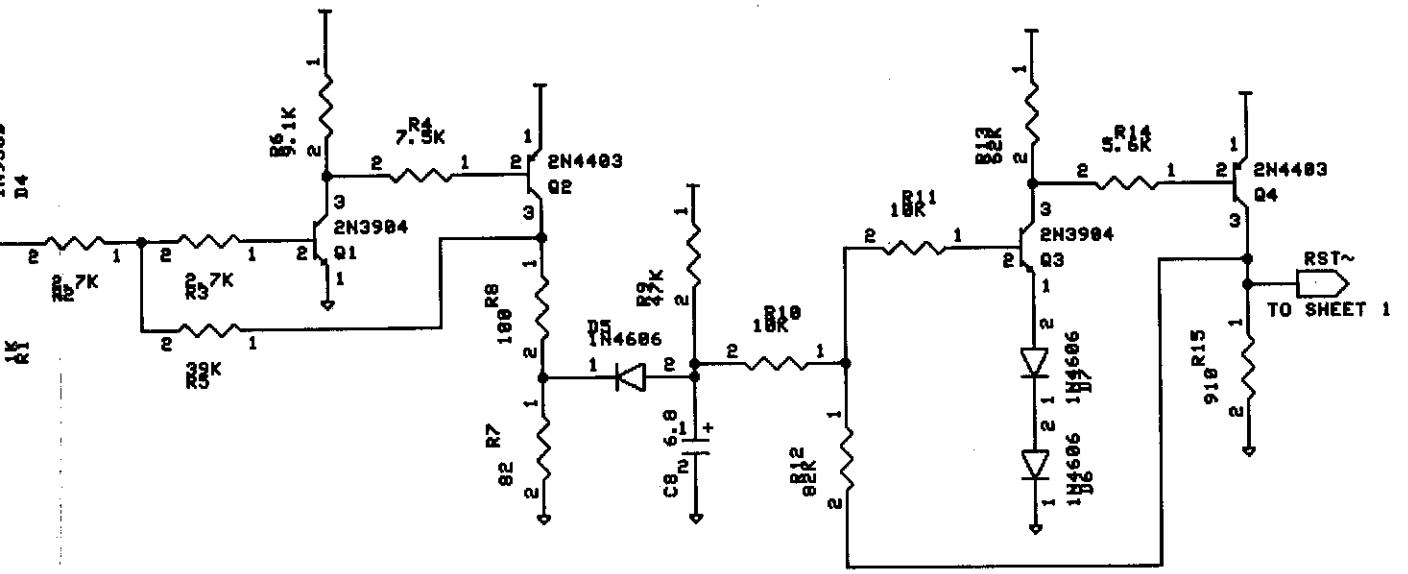

NOTES:	BALLY MIDWAY MFG. CO.
C. MEDNICK	
04 APR 86	PINBALL TURBO CHEAP SQUEAK
	M051-00114-C147
	A084-91855-C000
	SHEET 3 OF 3 REV

03,CP10,D7,FB5,J2,JW8,L2,LED1,OSC1,Q9,R64,SW1,TP2,U14,VR1
C1,C9,C18-C22,C40-C43,FB3-FB5,Q5,Q9,R16-R18,R23,R25,R62-R64,U11,U14
8,R59

04 APR 86 13:22 /USER/CHM/P_TURBOPIN 3.DRAW

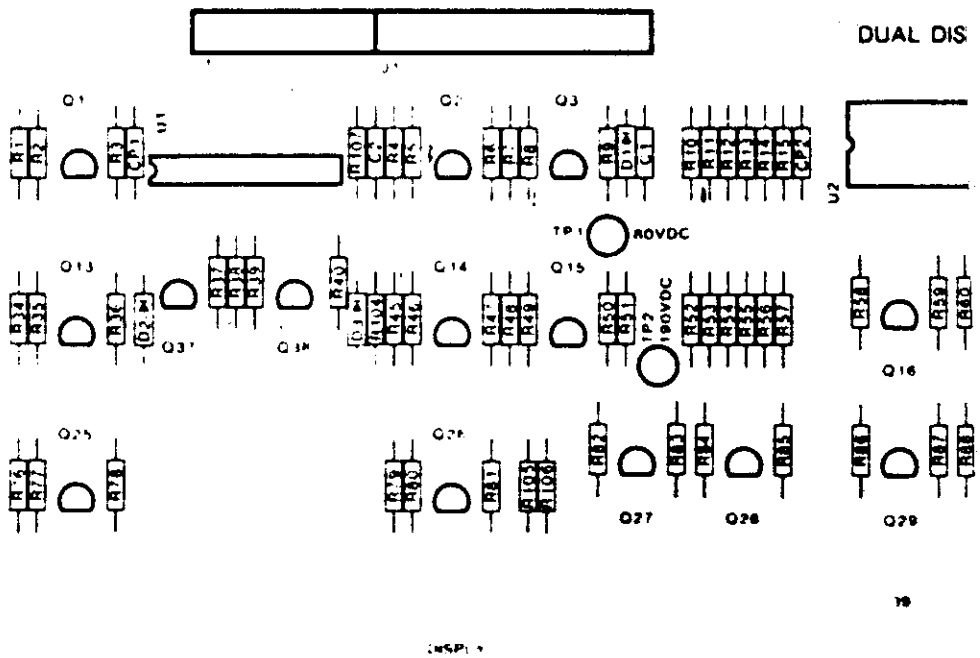

DIM. TOLERANCES	
UNLESS OTHERWISE SPEC	
CONCENTRICITY T I R	002
FRACTIONAL	1/64
DECIMAL	005
HOLE DIA	+ 002 — 000
ANGLE	1/2°
DO NOT SCALE DWG	

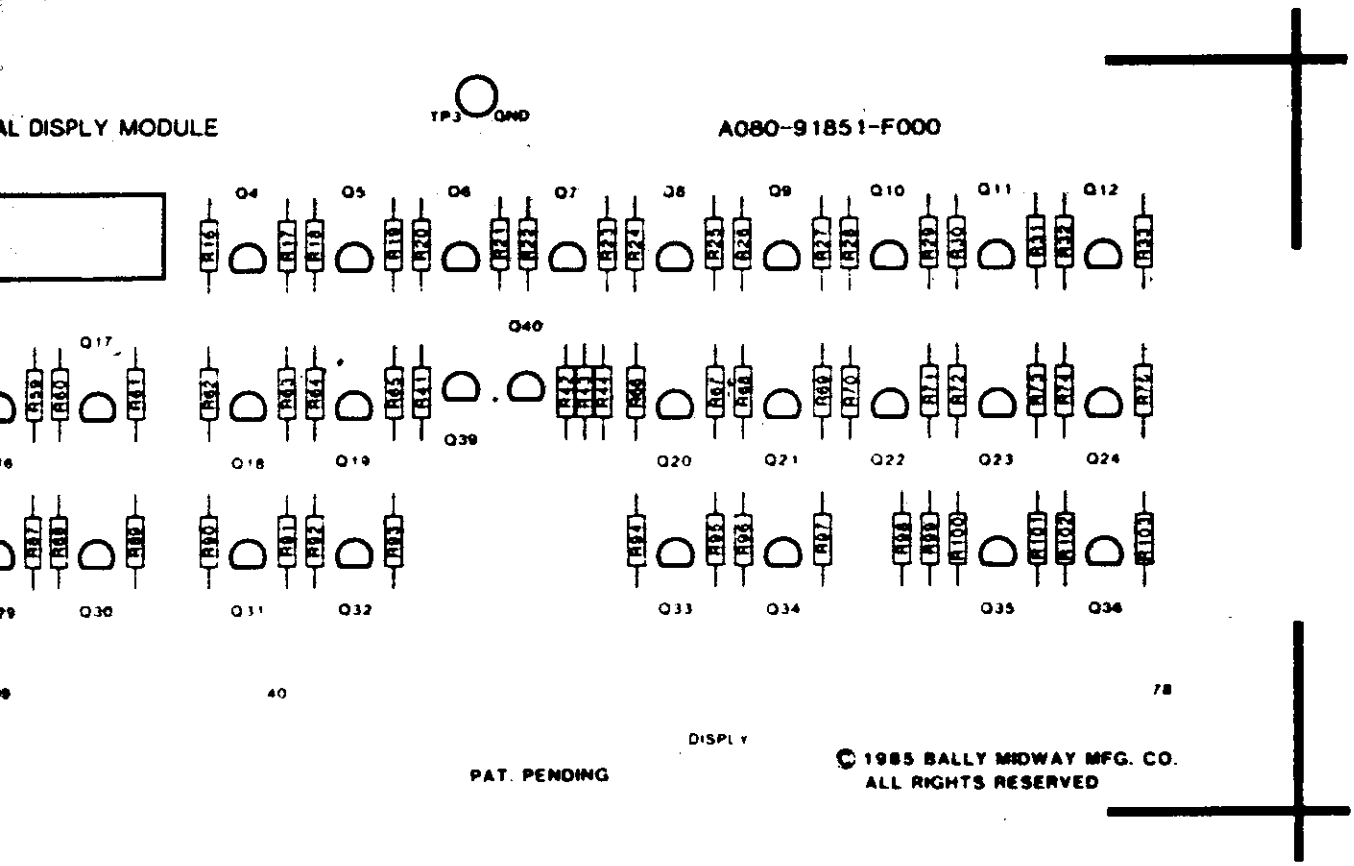

THIS DWG IS CONFIDENTIAL & PROPERTY OF BALLY/MIDWAY MFG CO

DRN CL	DATE 04/08/86	SCALE	Bally/MIDWAY MFG. CO FRANKLIN PARK, IL 60131
MECH CHK	DATE		ASSY DRAWING DUAL DISPLAY MODULE A084-91851-F000
			PART NO. M054-00365-F

DESIGNATION LIST

DESIGNATION NO.	DESCRIPTION
R1	1.5K 1/4W 5% CARBON
R2	820 OHM 1/4W 5% CARBON
R3	300K 1/4W 5% CARBON
R4	1.5K 1/4W 5% CARBON
R5	510 OHM 1/4W 5% CARBON
R6	300K 1/4W 5% CARBON
R7	1.5K 1/4W 5% CARBON
R8	820 OHM 1/4W 5% CARBON
R9	300K 1/4W 5% CARBON
R10 - R15	20K 1/4W 5% CARBON
R16	9.1K 1/4W 5% CARBON
R17	100K 1/4W 5% METAL FILM
R18	2.2K 1/4W 5% CARBON
R19	300K 1/4W 5% CARBON
R20	9.1K 1/4W 5% CARBON
R21	100K 1/4W 5% METAL FILM
R22	2.2K 1/4W 5% CARBON
R23	300K 1/4W 5% CARBON
R24	9.1K 1/4W 5% CARBON
R25	100K 1/4W 5% METAL FILM
R26	2.2K 1/4W 5% CARBON
R27	300K 1/4W 5% CARBON
R28	9.1K 1/4W 5% CARBON
R29	100K 1/4W 5% METAL FILM
R30	9.1K 1/4W 5% CARBON
R31	100K 1/4W 5% METAL FILM
R32	9.1K 1/4W 5% CARBON
R33	100K 1/4W 5% METAL FILM
R34	1.5K 1/4W 5% CARBON
R35	820 OHM 1/4W 5% CARBON
R36	300K 1/4W 5% CARBON
R37	300K 1/4W 5% CARBON
R38	1.5K 1/4W 5% CARBON
R39	1K 1/4W 5% CARBON
R40	100K 1/4W 5% CARBON
R41	100K 1/4W 5% CARBON
R42	1K 1/4W 5% CARBON
R43	1.5K 1/4W 5% CARBON
R44	300K 1/4W 5% CARBON
R45	1.5K 1/4W 5% CARBON
R46	820 OHM 1/4W 5% CARBON
R47	300K 1/4W 5% CARBON
R48	1.5K 1/4W 5% CARBON
R49	820 OHM 1/4W 5% CARBON
R50	300K 1/4W 5% CARBON
R51	100K 1/4W 5% METAL FILM
R52 - R57	2.2M 1/4W 5% CARBON
R58	9.1K 1/4W 5% CARBON

DESIGNATION LIST

DESIGNATION NO.	DESCRIPTION
R59	100K 1/4W 5% METAL FILM
R60	100K 1/4W 5% METAL FILM
R61	9.1K 1/4W 5% CARBON
R62	9.1K 1/4W 5% CARBON
R63	100K 1/4W 5% METAL FILM
R64	9.1K 1/4W 5% CARBON
R65	100K 1/4W 5% METAL FILM
R66	9.1K 1/4W 5% CARBON
R67	100K 1/4W 5% METAL FILM
R68	9.1K 1/4W 5% CARBON
R69	100K 1/4W 5% METAL FILM
R70	300K 1/4W 5% CARBON
R71	2.2K 1/4W 5% CARBON
R72	300K 1/4W 5% CARBON
R73	2.2K 1/4W 5% CARBON
R74	300K 1/4W 5% CARBON
R75	2.2K 1/4W 5% CARBON
R76	1.5K 1/4W 5% CARBON
R77	820 OHM 1/4W 5% CARBON
R78	300K 1/4W 5% CARBON
R79	1.5K 1/4W 5% CARBON
R80	820 OHM 1/4W 5% CARBON
R81	300K 1/4W 5% CARBON
R82	300K 1/4W 5% CARBON
R83	2.2K 1/4W 5% CARBON
R84	100K 1/4W 5% METAL FILM
R85	9.1K 1/4W 5% CARBON
R86	300K 1/4W 5% CARBON
R87	2.2K 1/4W 5% CARBON
R88	2.2K 1/4W 5% CARBON
R89	300K 1/4W 5% CARBON
R90	300K 1/4W 5% CARBON
R91	2.2K 1/4W 5% CARBON
R92	300K 1/4W 5% CARBON
R93	2.2K 1/4W 5% CARBON
R94	300K 1/4W 5% CARBON
R95	2.2K 1/4W 5% CARBON
R96	300K 1/4W 5% CARBON
R97	2.2K 1/4W 5% CARBON
R98	10M 1/4W 5% CARBON
R99	1M 1/4W 5% CARBON
R100	300K 1/4W 5% CARBON
R101	2.2K 1/4W 5% CARBON
R102	100K 1/4W 5% METAL FILM
R103	9.1K 1/4W 5% CARBON
R104	150K 1/4W 5% CARBON
R105	10M 1/4W 5% CARBON
R106	1M 1/4W 5% CARBON
R107	10K 1/4W 5% CARBON

DESIGNATION LIST

DESIGNATION NO.	DESCRIPTION
C1	.01UF 500V CER.
C2	100PF 50V AX. CER.
CP1, CP2	.01UF 50V CER.
D1	1M110ZS10 110V ZENER DIODE
D2,D3	1N4148 DIODE
Q1 - Q4	MPS-A-42 NPN XSTR
Q5	2N5401 PNP XSTR
Q6	MPS-A-42
Q7	2N5401
Q8	MPS-A-42
Q9	2N5401
Q10 - Q21	MPS-A-42
Q22 - Q24	2N5401
Q25	MPS-A-42
Q26	MPS-A-42
Q27	2N5401
Q28	MPS-A-42
Q29 - Q35	2N5401
Q36 - Q40	MPS-A-42
U1	74HC373 CMOS OCTAL LATCH
U2	14514 1-16 DECODER
DISPLAY 1	14 DIGIT, 9 SEGMENT GAS DISCHARGE DISPLAY
J1	.025 SQ. PINS
TP1, TP2, TP3	TEST LOOPS
	FOAM TAPE
	BUMPER
	DISPLAY MTG. CLIPS
	SCREWS
M051-00365- A014	DISPLAY MTG. PROCEDURE
A080-91851-F000	DUAL DISPLAY MODULE P.C.B.

CROSS REFERENCE LIST

DESCRIPTION	QTY.	DESIGNATION NO.	PART NOS.
510 OHM 1/4W 5% CARBON	1	R5	100E-00005-0053
820 OHM 1/4W 5% CARBON	7	R2,R8,R35,R46 R49,R77,R80	100E-00005-0058
1K 1/4W 5% CARBON	2	R39,R42	100E-00005-0061
1.5K 1/4W 5% CARBON	10	R1,R4,R7,R34,R38 R43,R45,R48 R76,R79	100E-00005-0065
2.2K 1/4W 5% CARBON	14	R18,R22,R26,R71 R73,R75,R83,R87 R88,R91,R93,R95 R97,R101	100E-00005-0069
9.1K 1/4W 5% CARBON	14	R16,R20,R24,R28 R30,R32,R58,R61 R62,R64,R66,R68 R85,R103	100E-00005-0087
10K 1/4W 5% CARBON	1	R107	100E-00005-0088
20K 1/4W 5% CARBON	6	R10 - R15	100E-00005-0095
100K 1/4W 5% CARBON	2	R40,R41	100E-00005-0115
100K 1/4W 5% METAL FILM	15	R17,R21,R25,R29 R31,R33,R51,R59 R60,R63,R65,R67 R69,R84,R102	100E-00001-0011
150K 1/4W 5% CARBON	1	R104	100E-00005-0120
300K 1/4W 5% CARBON	24	R3,R6,R9,R19,R23 R27,R36,R37,R44, R47,R50,R70,R72, R74,R78,R81,R82, R86,R89,R90,R92, R94,R96,R100	100E-00005-0127
1.0M OHM 1/4W 5% CARBON	2	R99,R106	100E-00005-0140
2.2M OHM 1/4W 5% CARBON	6	R52 - R57	100E-00005-0147
10.0M OHM 1/4W 5% CARBON	2	R98,R105	100E-00005-0162
100PF AX. CER.	1	C2	0639-00800-0003
.01UF	2	CP1,CP2	0360-00800-0005
.01UF 500V	1	C1	0360-00800-0013
1N4148	2	D2,D3	103E-00002-0005
1M110ZS10 110V ZENER DIODE	1	D1	103E-00001-0028
2N5401 PNP XSTR	14	Q5,Q7,Q9,Q22,Q23 Q24,Q27,Q29,Q30 Q31,Q32,Q33,Q34 Q35	0360-00802-0006
MPS-A-42 NPN XSTR	26	Q1-Q4,Q6,Q8,Q10-Q21,Q25,Q26,Q28 Q36-Q40	0360-00802-0007
14514 1-16 DECODER	1	U2	0360-00803-0013
74HC373 OCTAL LATCH	1	U1	0365-00803-0015
.025SQ. PINS	23	J1	0304-00804-0009
14 DIGIT, 9 SEGMENT GAS DISCHARGE DISPLAY	1	DISPLAY 1	119E-00002-0006
TEST LOOPS	3	TP1 - TP3	0017-00007-0131
FOAM TAPE	2		0017-00081-0285
BUMPER	1		0017-00041-0591
DISPLAY MTG. CLIP	2		0365-00174-00X
SCREW	2		0017-00101-0171
DISPLAY MTG. PROCEDURE	1		M051-00365-A01
DUAL DISPLAY MODULE PCB	1		A080-91851-F00

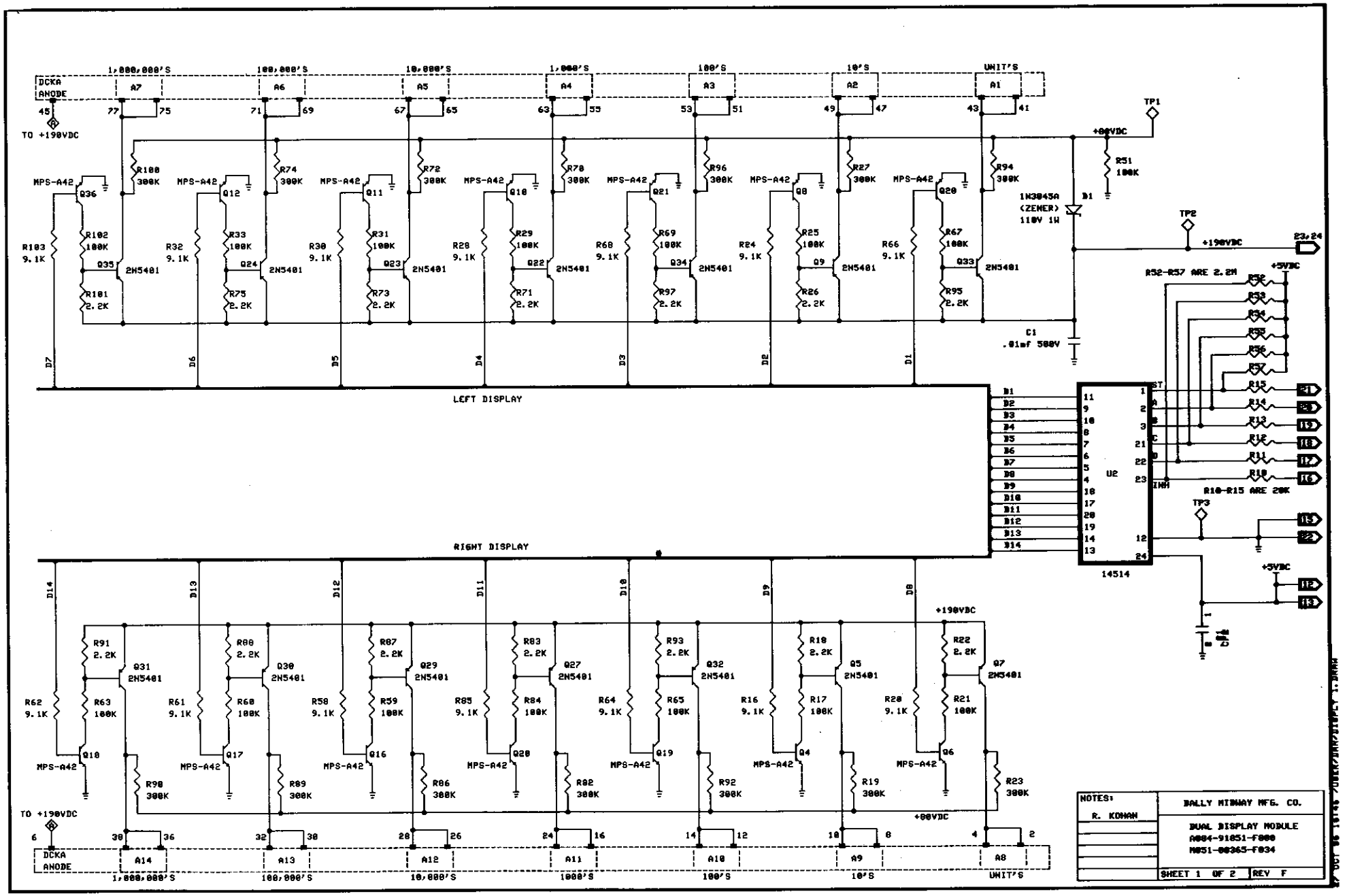
1,000,000'S
100,000'S
10,000'S
1,000'S
100'S
10'S
UNIT'S
DCKA ANODE
TO +190VDC
MPS-A42
2N5401
LEFT DISPLAY
RIGHT DISPLAY
1N3045A (ZENER) 110V 1W
C1 .01mf 500V
+190VDC
+5VDC
R52-R57 ARE 2.2M
R10-R15 ARE 20K
14514
U2
TP1
TP2
TP3
C14
NOTES:
R. KOHAN
BALLY MIDWAY MFG. CO.
DUAL DISPLAY MODULE
A084-91851-F000
M051-00365-F034
SHEET 1 OF 2
REV F

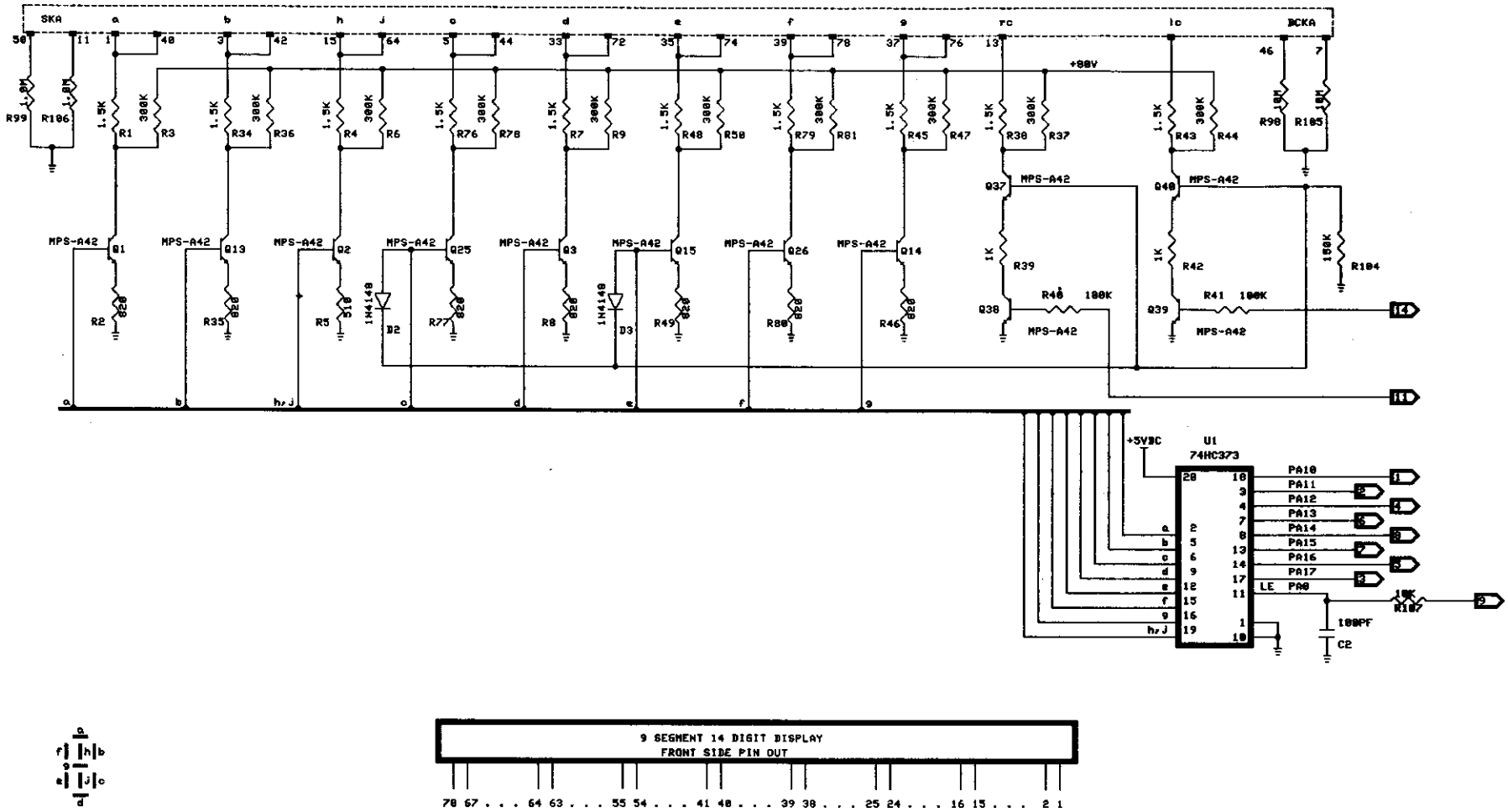

NOTES:	BALLY MIDWAY MFG. CO.
R. KOHAN	DUAL DISPLAY MODULE A804-91851-F000 M851-00365-F034
	SHEET 2 OF 2 REV F

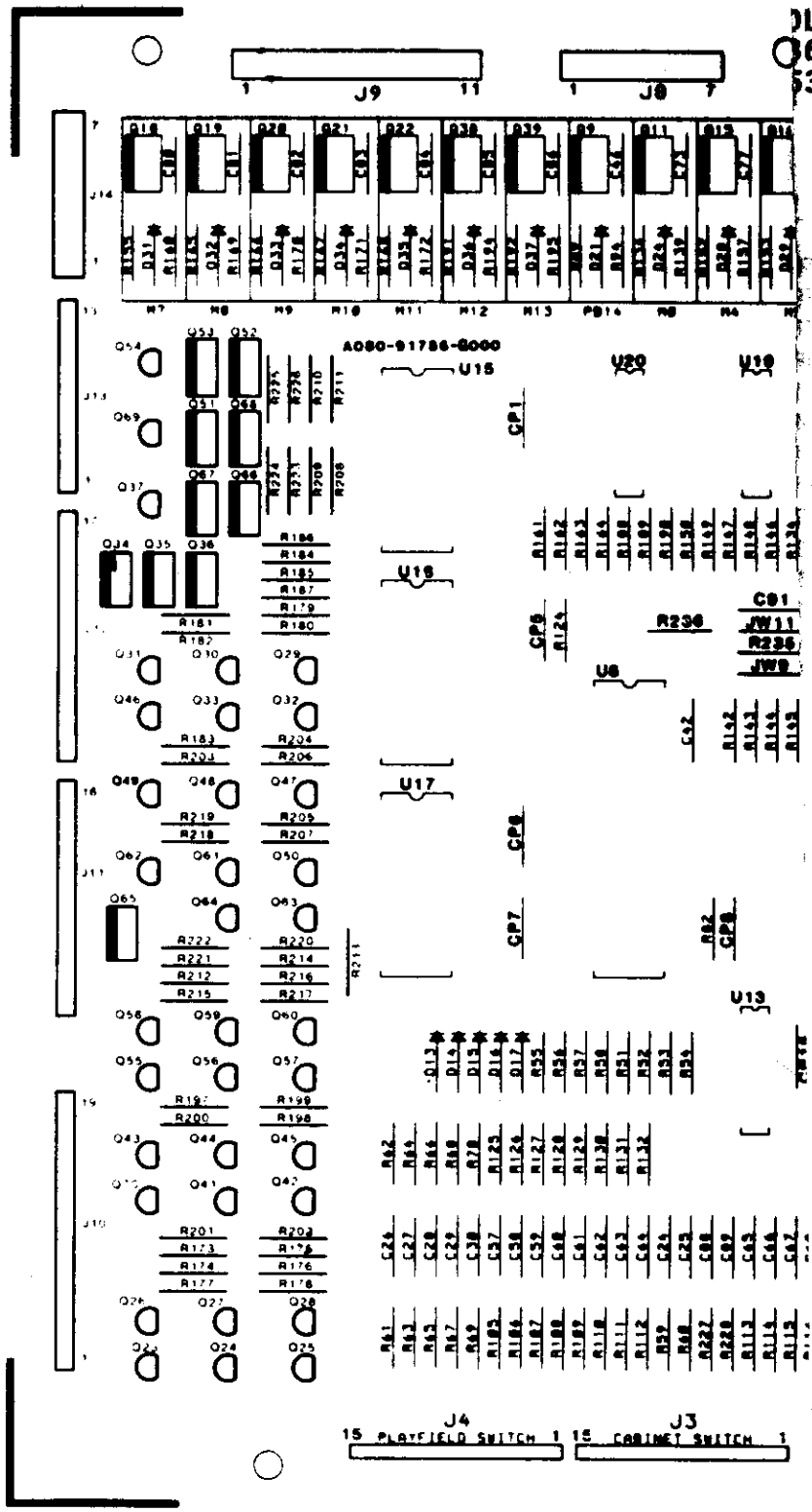

THIS DW

DIM. TOLERANCES	FIRST USED ON		
UNLESS OTHERWISE SPEC.	DRN CL	DATE 04/08/86	SCALE
CONCENTRICITY T.I.R. .002	MECH CHK	MAT'L	
FRACTIONAL ± 1/64	ELEC CHK	FINISH	
DECIMAL ± .005			
HOLE DIA. +.002 −.000			
ANGLE ± 1/2°			
DO NOT SCALE DWG.			

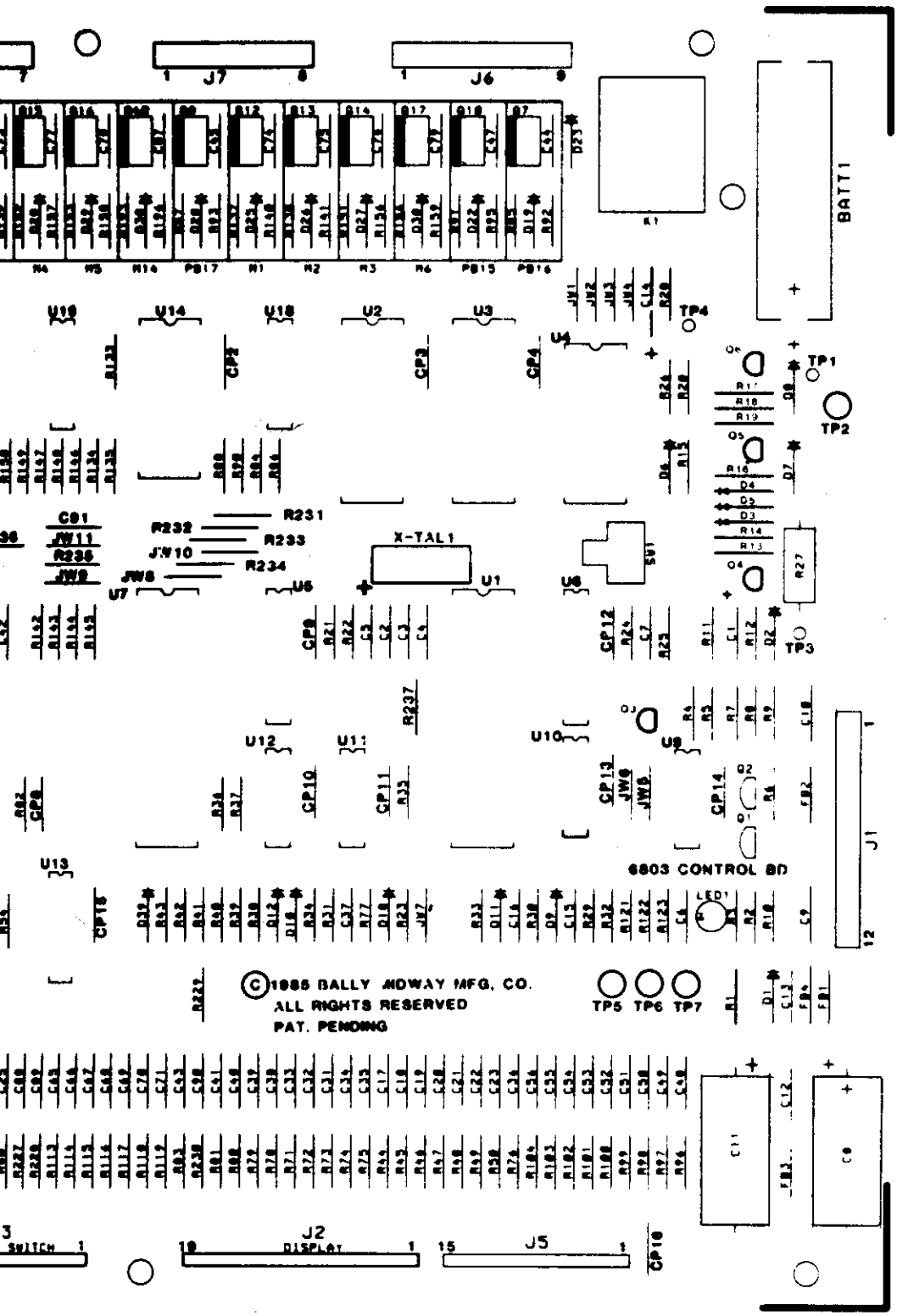

THIS DWG IS CONFIDENTIAL & PROPERTY OF MIDWAY MFG. CO.

SCALE	MIDWAY MFG. CO. FRANKLIN PK., IL. 60131 A BALLY CO.
	ASSY DRAWING 6803 CONTROL BD. A084-91786-G000
	REVISIONS
	PART NO. M-0-5-1-0-0-C-5-3-G-0-0-3

CROSS REFERENCE LIST

DESCRIPTION	QTY.	DESIGNATION NO.	PART NOS.
27pf 50V CER.	2	C2, C3	0360-00800-0052
47pf 50V CER.	1	C7	0360-00800-0027
390pf 50V CER.	25	C24-C30, C57-C71 C88-C90	0360-00800-0001
470pf 1KV CER.	27	C17-C23, C31-C36, C38-C41, C48-C56, C91	0307-00800-0008
.002uf 1KV CER.	19	C44-C47, C73-C87	0360-00800-0012
.003uf 1KV CER.	1	C43	0360-00800-0025
.01uf 50V CER.	24	C6, C9, C10, C12, C13 C15, C16, C42, CP1-CP16	0365-00800-0014
.05uf 16V CER.	1	C37	0360-00800-0006
.1uf 50V CER.	1	C4	0360-00800-0058
4.7uf 25V TANT	2	C5, C14	0360-00800-0008
6.8uf 25V TANT	1	C1	0360-00800-0048
470uf 16V ELEC	1	C8	0360-00800-0022
470uf 25V ELEC	1	C11	0360-00800-0024
82 OHM 1/4W 5%	1	R9	100E-00005-0031
100 OHM 1/4W 5%	1	R8	100E-00005-0033
110 OHM 1/4W 5%	1	R83	100E-00005-0034
120 OHM 1/4W 5%	21	R24, R85, R87, R89, R91, R121, R136-R138, R151-R155, R165-R168, R191-R193	100E-00005-0035
270 OHM 1/4W 5%	1	R28	100E-00005-0044
330 OHM 1/4W 5%	23	R92-R95, R139-R141, R156-R160, R169-R172, R194-R196, R231-R234	100E-00005-0047
470 OHM 1/4W 5%	9	R96-R104	100E-00005-0051
560 OHM 1/4W 5%	1	R1	100E-00005-0054
680 OHM 1/4W 5%	1	R25	100E-00005-0056
750 OHM 1/4W 5%	1	R19	100E-00005-0057
910 OHM 1/4W 5%	1	R18	100E-00005-0059
1K 1/4W 5%	3	R3, R29, R32	100E-00005-0061
1.2K 1/4W 5%	60	R44-R50, R59-R61, R63, R65, R67, R69, R71-R76 R78-R82, R105-R119, R122 R133-R135, R146-R150, R161-R164, R188-R190, R227, R228, R230, R236	100E-00005-0063
1.5K 1/4W 5%	1	R20	100E-00005-0065
2K 1/4W 5%	46	R123, R173-R187 R197-R226	100E-00005-0068
2.7K 1/4W 5%	2	R2, R6	100E-00005-0071
3K 1/4W 5%	1	R17	100E-00005-0073
3.3K 1/4W 5%	18	R21-R23, R35, R51-R58, R124, R142-R145, R235	100E-00005-0074
3.9K 1/4W 5%	4	R84, R86, R88, R90	100E-00005-0077
4.7K 1/4W 5%	8	R36-R43	100E-00005-0079
5.6 1/4W 5%	1	R16	100E-00005-0082

ROARD
-G000
-G003

CROSS REFERENCE LIST

DESCRIPTION	QTY.	DESIGNATION NO.	PART NOS.
7.5 1/4W 5%	1	R5	100E-00005-0085
9.1 1/4W 5%	1	R4	100E-00005-0087
10K 1/4W 5%	4	R12, R13, R30, R33	100E-00005-0088
15K 1/4W 5%	2	R31, R34	100E-00005-0092
39K 1/4W 5%	1	R7	100E-00005-0102
47K 1/4W 5%	2	R10, R11	100E-00005-0104
56K 1/4W 5%	14	R62, R64, R66, R68 R70, R125-R132, R229	100E-00005-0106
62K 1/4W 5%	1	R15	100E-00005-0107
82K 1/4W 5%	1	R14	100E-00005-0112
100K 1/4W 5%	2	R26, R237	100E-00005-0115
270K 1/4W 5%	1	R77	100E-00005-0126
82 OHM 1W 10%	1	R27	100E-00007-0014
1N958B ZENER	1	D1	103E-00001-0002
1N4004	20	D19-D38	103E-00003-0005
1N4148	13	D3, D6, D9-D18, D39	103E-00002-0005
1N4606	5	D2, D4, D5, D7, D8	103E-00002-0006
2N3904	3	Q2, Q4, Q6	104E-00001-0006
2N4403	2	Q3, Q5	104E-00002-0006
2N5060	35	Q23-Q33, Q37, Q41-Q50, Q54-Q64, Q69, Q70	104E-00015-0001
2N5305	1	Q1	104E-00007-0003
MCR106-1	10	Q34-Q36, Q51-Q53 Q65-Q68	0360-00802-0009
SE9302	19	Q7-Q22, Q38-Q40	0360-00802-0008
4011	1	U11	0360-00803-0010
4502	1	U13	0360-00803-0005
4514B	3	U15-U17	0360-00803-0013
4584	1	U12	0066-090BX-XXDX
6116 RAM	1	U4	0365-00803-0013
6803 MPU	1	U1	0360-00803-0048
6821 PIA	2	U7, U8	0360-00803-0017
74LS04	1	U10	0A15-00803-0010
74LS10	1	U9	0A89-00803-0007
75LS154	1	U14	0360-00803-0024
74HCT245	1	U5	0365-00803-0014
74LS373	1	U6	0A89-00803-0006
CA3081	3	U18-U20	0360-00803-0007
3.580 MHz CRYSTAL	1	XTAL-1	109E-00001-0003
LED GREEN	1	LED 1	0017-00007-0131
TEST POINTS	7	TP1-TP7	0017-00007-0131
SWITCH P.B.	1	SW1	0017-00032-0038
BATTERY 3.6V	1	BATT-1	0017-00003-0172
ZERO OHM RES. JUMPER	5	JW2, JW4, JW6, JW8, JW10	117E-00001-0001
RELAY 48VDC	1	K1	114E-00001-0011
40 PIN I.C. SOCKET	3	XU1, XU7, XU8	110E-00001-0011
28 PIN I.C. SOCKET	2	XU2, XU3	110E-00001-0010
24 PIN I.C. SOCKET	1	XU4	110E-00001-0007
FERRITE BEAD	4	FB1-FB4	0316-00804-0002

DESIGNATION LIST

DESIGNATION	DESCRIPTION
C1	6.8UF 25V TANT.
C2,C3	27PF 50V CER.
C4	.1UF 50V CER.
C5	4.7UF 25V TANT.
C6	.01UF 50V CER.
C7	47PF 50V CER.
C8	470UF 16V ELEC.
C9,C10	.01UF 50V CER.
C11	470UF 25V ELEC.
C12,C13	.01UF 50V CER.
C14	4.7UF 25V TANT.
C15,C16	.01UF 50V CER.
C17 - C23	470PF 1KV CER.
C24 - C30	390PF 50V CER.
C31 - C36	470PF 1KV CER.
C37	.05UF 16V CER.
C38 - C41	470PF 1KV CER.
C42	.01UF 50V CER.
C43	.003UF 1KV CER.
C44 - C47	.002UF 1KV CER.
C48 - C56	470PF 1KV CER.
C57 - C71	390PF 50V CER.
C73 - C87	.002 1KV CER.
C88 - C90	390PF 50V CER.
C91	470PF 1KV CER.
CP1 - CP16	.01 50V CER.
R1	560 OHM 1/4W 5%
R2	2.7K 1/4W 5%
R3	1K 1/4W 5%
R4	9.1K 1/4W 5%
R5	7.5K 1/4W 5%
R6	2.7K 1/4W 5%
R7	39K 1/4W 5%
R8	100 OHM 1/4W 5%
R9	82 OHM 1/4W 5%
R10,R11	47K 1/4W 5%
R12,R13	10K 1/4W 5%
R14	82K 1/4W 5%
R15	62K 1/4W 5%
R16	5.6K 1/4W 5%
R17	3K 1/4W 5%
R18	910 OHM 1/4W 5%
R19	750 OHM 1/4W 5%
R20	1.5K 1/4W 5%
R21 - R23	3.3K 1/4W 5%
R24	120 OHM 1/4W 5%
R25	680 OHM 1/4W 5%
R26	100K 1/4W 5%
R27	82 OHM 1W 10%

DESIGNATION	DESCRIPTION
R28	270 OHM 1/4W 5%
R29	1K 1/4W 5%
R30	10K 1/4W 5%
R31	15K 1/4W 5%
R32	1K 1/4W 5%
R33	10K 1/4W 5%
R34	15K 1/4W 5%
R35	3.3K 1/4W 5%
R36 - R43	4.7K 1/4W 5%
R44 - R50	1.2K 1/4W 5%
R51 - R58	3.3K 1/4W 5%
R59 - R61	1.2K 1/4W 5%
R62	56K 1/4W 5%
R63	1.2K 1/4W 5%
R64	56K 1/4W 5%
R65	1.2K 1/4W 5%
R66	56K 1/4W 5%
R67	1.2K 1/4W 5%
R68	56K 1/4W 5%
R69	1.2K 1/4W 5%
R70	56K 1/4W 5%
R71 - R76	1.2K 1/4W 5%
R77	270K 1/4W 5%
R78 - R82	1.2K 1/4W 5%
R83	110 OHM 1/4W 5%
R84	3.9K 1/4W 5%
R85	120 OHM 1/4W 5%
R86	3.9K 1/4W 5%
R87	120 OHM 1/4W 5%
R88	3.9K 1/4W 5%
R89	120 OHM 1/4W 5%
R90	3.9K 1/4W 5%
R91	120 OHM 1/4W 5%
R92 - R95	330 OHM 1/4W 5%
R96 - R104	470 OHM 1/4W 5%
R105 - R119	1.2K 1/4W 5%
R121	120 OHM 1/4W 5%
R122	1.2K 1/4W 5%
R123	2K 1/4W 5%
R124	3.3K 1/4W 5%
R125 - R132	56K 1/4W 5%
R133 - R135	1.2K 1/4W 5%
R136 - R138	120 OHM 1/4W 5%
R139 - R141	330 OHM 1/4W 5%
R142 - R145	3.3K 1/4W 5%
R146 - R150	1.2K 1/4W 5%
R151 - R155	120 OHM 1/4W 5%
R156 - R160	330 OHM 1/4W 5%
R161 - R164	1.2K OHM 1/4W 5%

DESI
R165
R169
R173
R188
R191
R194
R197
R227
R229
R230
R231
R235
R236
R237
D1
D2
D3
D4,D
D6
D7,D
D9 -
D19
D39
Q1
Q2
Q3
Q4
Q5
Q6
Q7 -
Q23
Q34
Q37
Q38
Q41
Q51
Q54
Q65
Q69,
U1
U4
U5
U6
U7,U8
U9
U10
U11
U12
U13
U14

03 CONTROL BOARD
084-91786-G000
051-00C53-G003

DESIGNATION	DESCRIPTION
R165 - R168	120 OHM 1/4W 5%
R169 - R172	330 OHM 1/4W 5%
R173 - R187	2K 1/4W 5%
R188 - R190	1.2K 1/4W 5%
R191 - R193	120 OHM 1/4W 5%
R194 - R196	330 OHM 1/4W 5%
R197 - R226	2K 1/4W 5%
R227,R228	1.2K 1/4W 5%
R229	56K 1/4W 5%
R230	1.2K 1/4W 5%
R231 - R234	330 OHM 1/4W 5%
R235	3.3K 1/4W 5%
R236	1.2K 1/4W 5%
R237	100K OHM 1/4W 5%
D1	1N958B
D2	1N4606
D3	1N4148
D4,D5	1N4606
D6	1N4148
D7,D8	1N4606
D9 - D18	1N4148
D19 - D38	1N4004
D39	1N4148
Q1	2N5305
Q2	2N3904
Q3	2N4403
Q4	2N3904
Q5	2N4403
Q6	2N3904
Q7 - Q22	SF9302
Q23 - Q33	2N5060
Q34 - Q36	MCR 106-1
Q37	2N5060
Q38 - Q40	SF9302
Q41 - Q50	2N5060
Q51 - Q53	MCR 106-1
Q54 - Q64	2N5060
Q65 - Q68	MCR 106-1
Q69,Q70	2N5060
U1	6803
U4	6116 RAM
U5	74HCT245
U6	74LS373
U7,U8	6821
U9	74LS10
U10	74LS04
U11	4011
U12	4584
U13	4502
U14	74LS154

DESIGNATION	DESCRIPTION
U15 - U17	4514B
U18 - U20	CA3081
XTAL-1	3.580 MHZ CRYSTAL
LED 1	LED GREEN
TP1 - TP7	TEST POINTS
SW1	SWITCH P.B.
BATT-1	BATTERY 3.6V
JW2	ZERO OHM RES. JUMPER
JW4	ZERO OHM RES. JUMPER
JW6	ZERO OHM RES. JUMPER
JW8	ZERO OHM RES. JUMPER
JW10	ZERO OHM RES. JUMPER
K1	RELAY 48V DC
XU1,XU7,XU8	40 PIN IC SOCKET
XU2, XU3	28 PIN IC SOCKET
XU4	24 PIN IC SOCKET
FB1 - FB4	FERRITE BEAD
J1	11 - .045 SQ. PINS
J2	18 - .025 SQ. PINS
J3	14 - .025 SQ. PINS
J4	14 - .025 SQ. PINS
J5	14 - .025 SQ. PINS
J6	8 - .045 SQ. PINS
J7	7 - .045 SQ. PINS
J8	6 - .045 SQ. PINS
J9	10 - .045 SQ. PINS
J10	18 - .025 SQ. PINS
J11	17 - .025 SQ. PINS
J12	16 - .025 SQ. PINS
J13	12 - .025 SQ. PINS
J14	5 - .045 SQ. PINS
P/O BATT-1	TY-WRAP
6803 CONTROL BD.	P.C. BOARD

6803 CONTROL BOARD
A084-91786-G000
M051-000C53-G003

CROSS REFERENCE LIST

DESCRIPTION	QTY.	DESIGNATION NO.	PART NOS.
.025 SQ. PINS	123	J2, J3, J4, J5, J10, J11, J12, J13	0304-00804-0009
.045 SQ. PINS	47	J1, J6, J7, J8, J9, J14	0304-00804-0010
TY-WRAP	1	P/O BATT-1	0017-00042-0622
P.C. BOARD	1	6803 CONTROL BOARD	A080-91786-G000

4-23-86 REV. 1.0 Fixed Part Number for 470PF Cap.

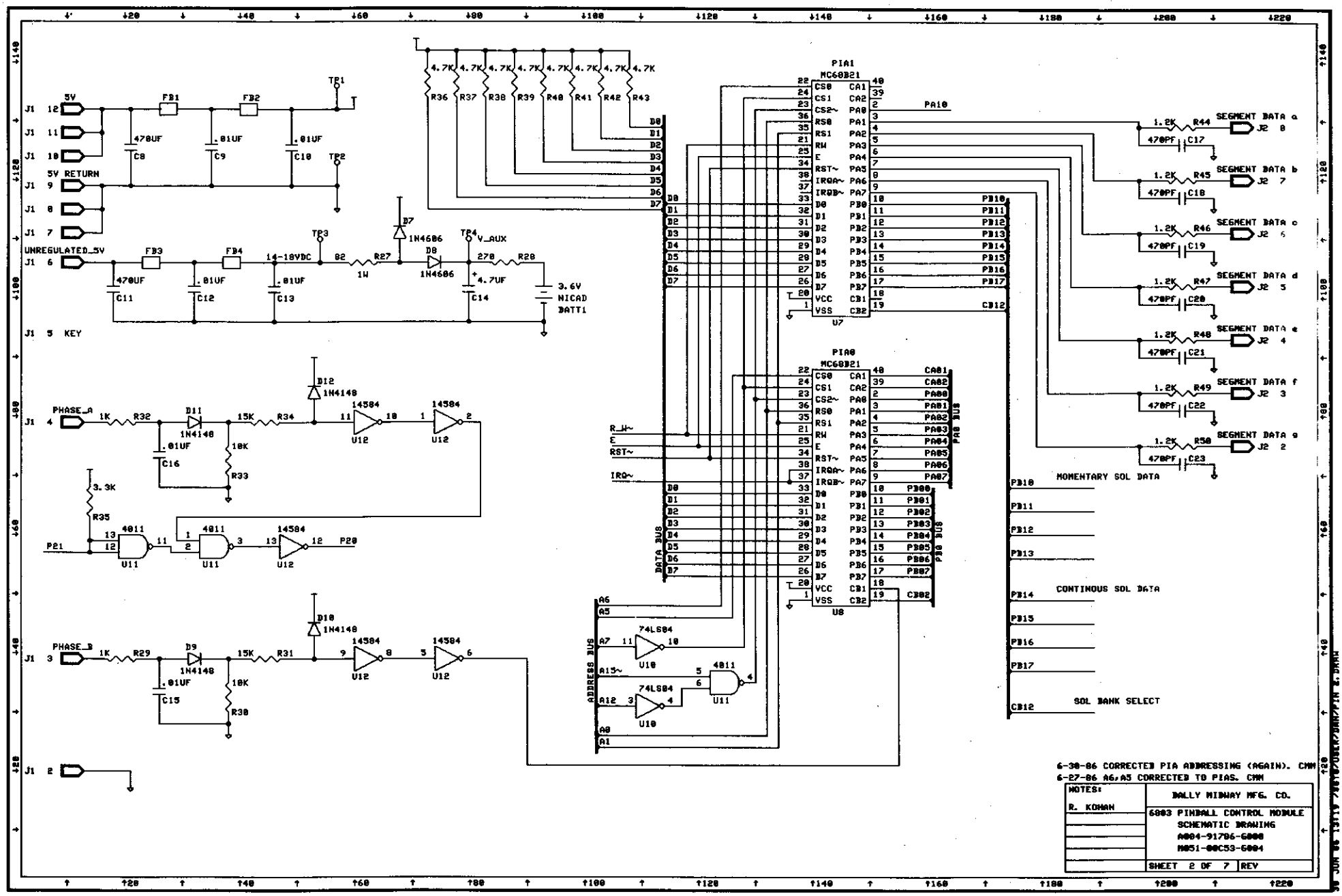
PIA1
MC68B21
U7
PIA0
MC68B21
U8
5V
5V RETURN
UNREGULATED_5V
J1 5 KEY
14-18VDC
V_AUX
3.6V
NICAD
BATT1
PHASE_A
PHASE_B
P21
P20
DATA BUS
ADDRESS BUS
PA0 BUS
PB0 BUS
PA10
CB12
MOMENTARY SOL DATA
CONTINOUS SOL DATA
SOL BANK SELECT
SEGMENT DATA a
SEGMENT DATA b
SEGMENT DATA c
SEGMENT DATA d
SEGMENT DATA e
SEGMENT DATA f
SEGMENT DATA g
6-30-86 CORRECTED PIA ADDRESSING (AGAIN). CMM
6-27-86 A6,A5 CORRECTED TO PIAS. CMM
NOTES:
R. KOHAN
BALLY MIDWAY MFG. CO.
6803 PINBALL CONTROL MODULE
SCHEMATIC DRAWING
A804-91706-6000
M051-00C53-6004
SHEET 2 OF 7
REV

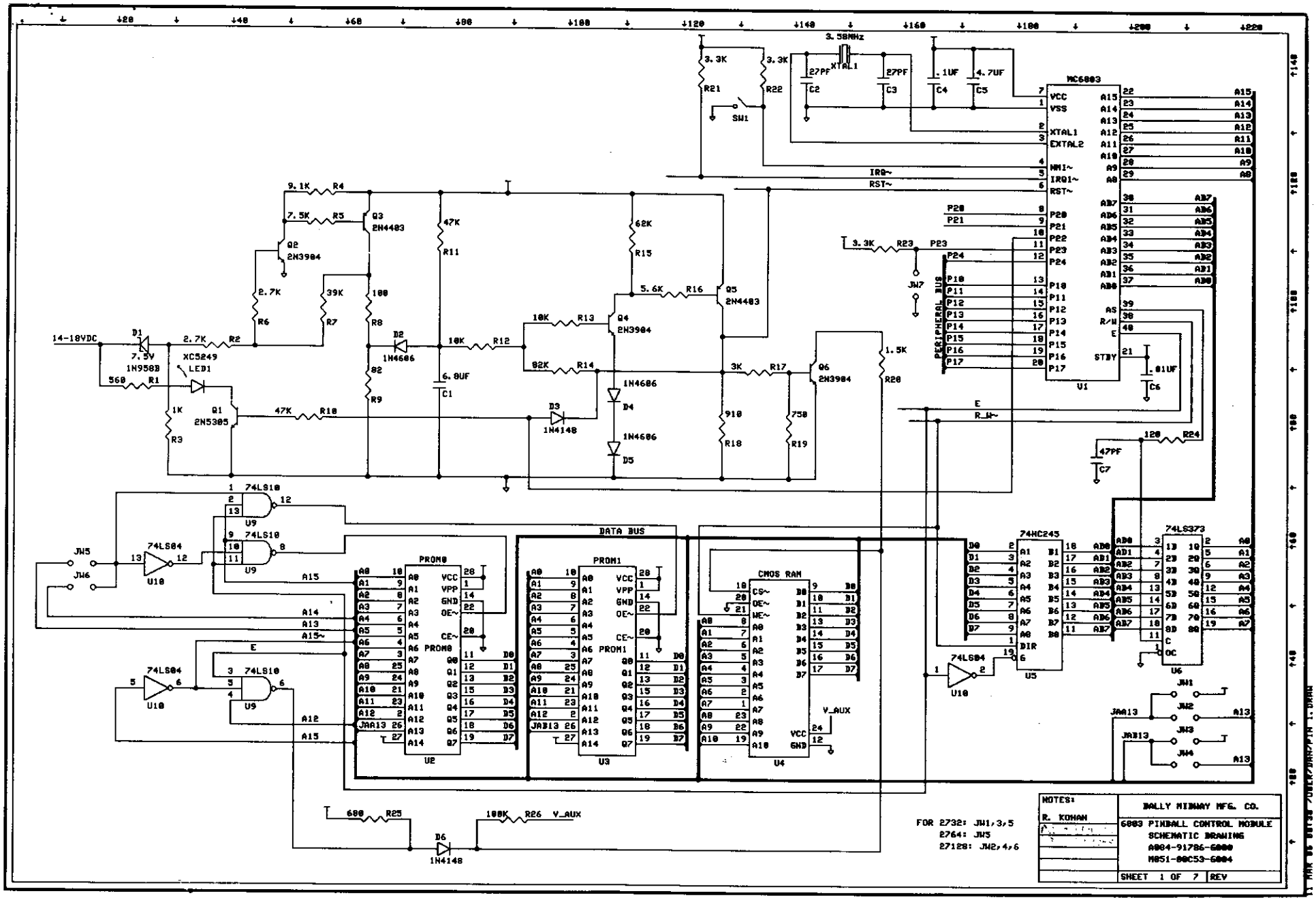
MC6803
V1
3.58MHz
XTAL1
27PF
C2
C3
.1UF
C4
4.7UF
C5
3.3K
R21
R22
SW1
IRQ~
RST~
P20
P21
P23
P24
P10
P11
P12
P13
P14
P15
P16
P17
PERIPHERAL BUS
A15
A14
A13
A12
A11
A10
A9
A8
AD7
AD6
AD5
AD4
AD3
AD2
AD1
AD0
AS
R/W
E
STBY
.01UF
C6
47PF
C7
120
R24
3.3K
R23
JW7
9.1K
R4
7.5K
R5
Q3
2N4403
Q2
2N3904
2.7K
R6
39K
R7
100
R8
82
R9
47K
R11
6.8UF
C1
10K
R12
62K
R15
5.6K
R16
Q5
2N4403
10K
R13
Q4
2N3904
82K
R14
1N4686
D4
1N4686
D5
3K
R17
910
R18
Q6
2N3984
750
R19
1.5K
R20
D3
1N4148
14-18VDC
D1
7.5V
1N958B
560
R1
2.7K
R2
XC5249
LED1
1K
R3
Q1
2N5305
47K
R10
D2
1N4686
E
R/W~
74LS10
U9
74LS04
U10
JW5
JW6
A15
A14
A13
A15~
E
A12
PROM0
U2
PROM1
U3
DATA BUS
CMOS RAM
U4
V_AUX
74HC245
U5
74LS373
U6
JW1
JW2
JW3
JW4
JAA13
JABI3
680
R25
100K
R26
V_AUX
D6
1N4148
FOR 2732: JW1,3,5
2764: JW5
27128: JW2,4,6
NOTES:
R. KOHAN
BALLY MIDWAY MFG. CO.
6803 PINBALL CONTROL MODULE
SCHEMATIC DRAWING
A804-91786-6000
M851-80C53-6004
SHEET 1 OF 7
REV

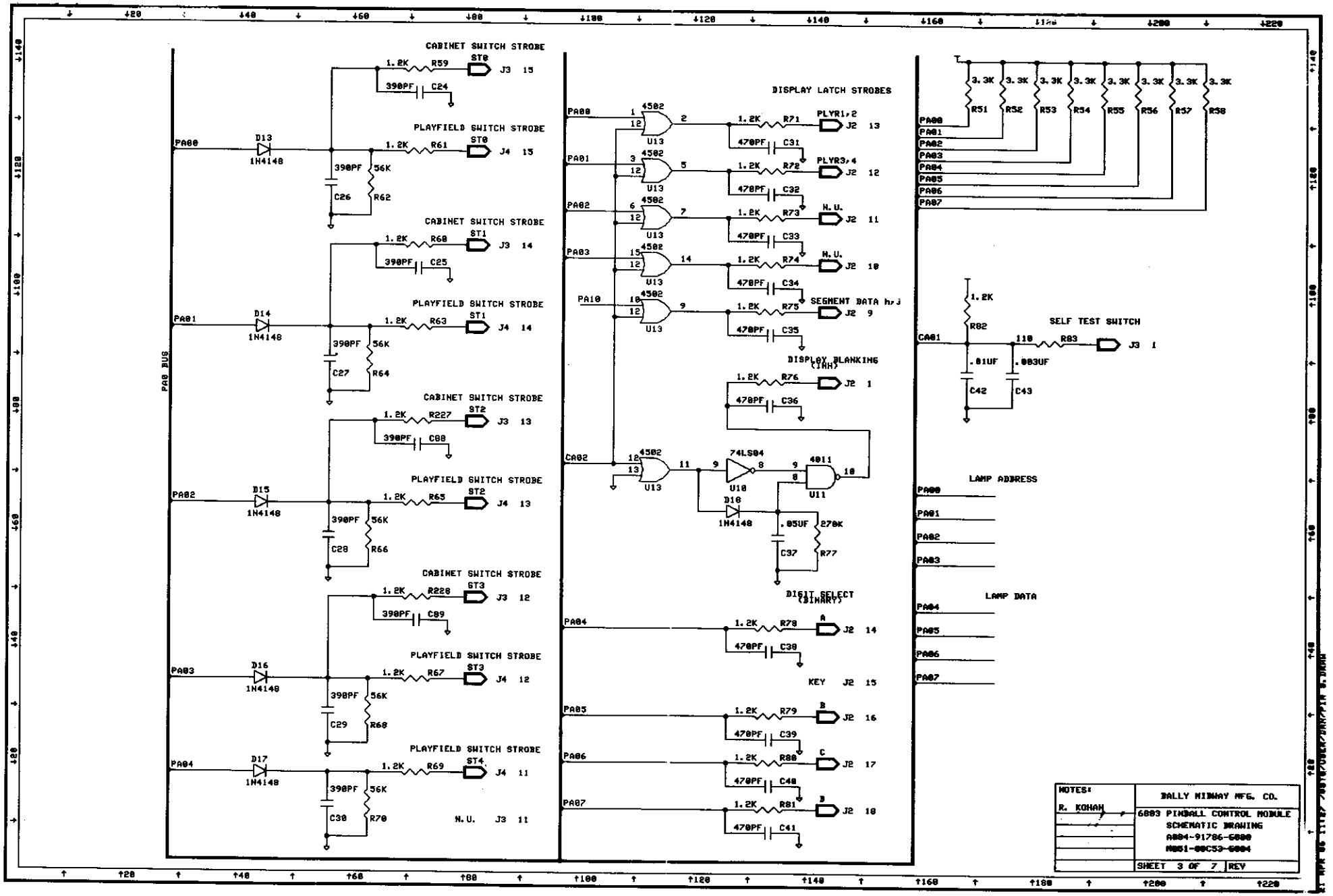
CABINET SWITCH STROBE
PLAYFIELD SWITCH STROBE
PA00 BUS
DISPLAY LATCH STROBES
PLYR1,2
PLYR3,4
N.U.
SEGMENT DATA h,j
DISPLAY BLANKING (INH)
DIGIT SELECT (BINARY)
KEY
LAMP ADDRESS
LAMP DATA
SELF TEST SWITCH
NOTES:
R. KOHAN
BALLY MIDWAY MFG. CO.
6803 PINBALL CONTROL MODULE
SCHEMATIC DRAWING
A804-91786-6800
M051-00C53-6004
SHEET 3 OF 7
REV

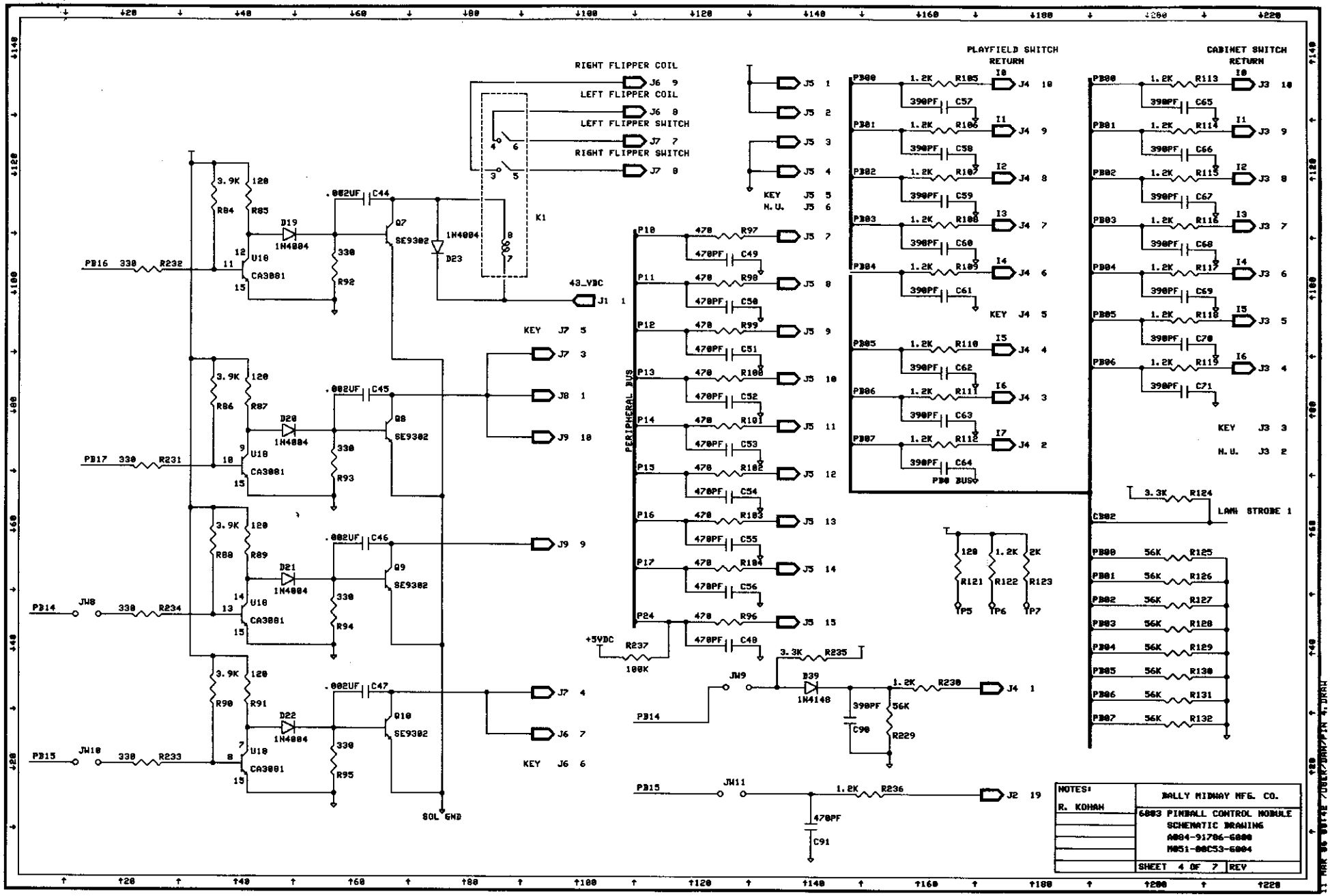
RIGHT FLIPPER COIL
LEFT FLIPPER COIL
LEFT FLIPPER SWITCH
RIGHT FLIPPER SWITCH
PLAYFIELD SWITCH RETURN
CABINET SWITCH RETURN
43_VDC
KEY J7 5
KEY J6 6
KEY J5 5
N.U. J5 6
KEY J4 5
KEY J3 3
N.U. J3 2
LAMP STROBE 1
PERIPHERAL BUS
PB0 BUS
SGL GND
+5VDC
K1
U18
CA3081
SE9302
1N4004
1N4148
NOTES:
R. KOHAN
BALLY MIDWAY MFG. CO.
6803 PINBALL CONTROL MODULE
SCHEMATIC DRAWING
A804-91786-6800
M051-00C53-6004
SHEET 4 OF 7
REV

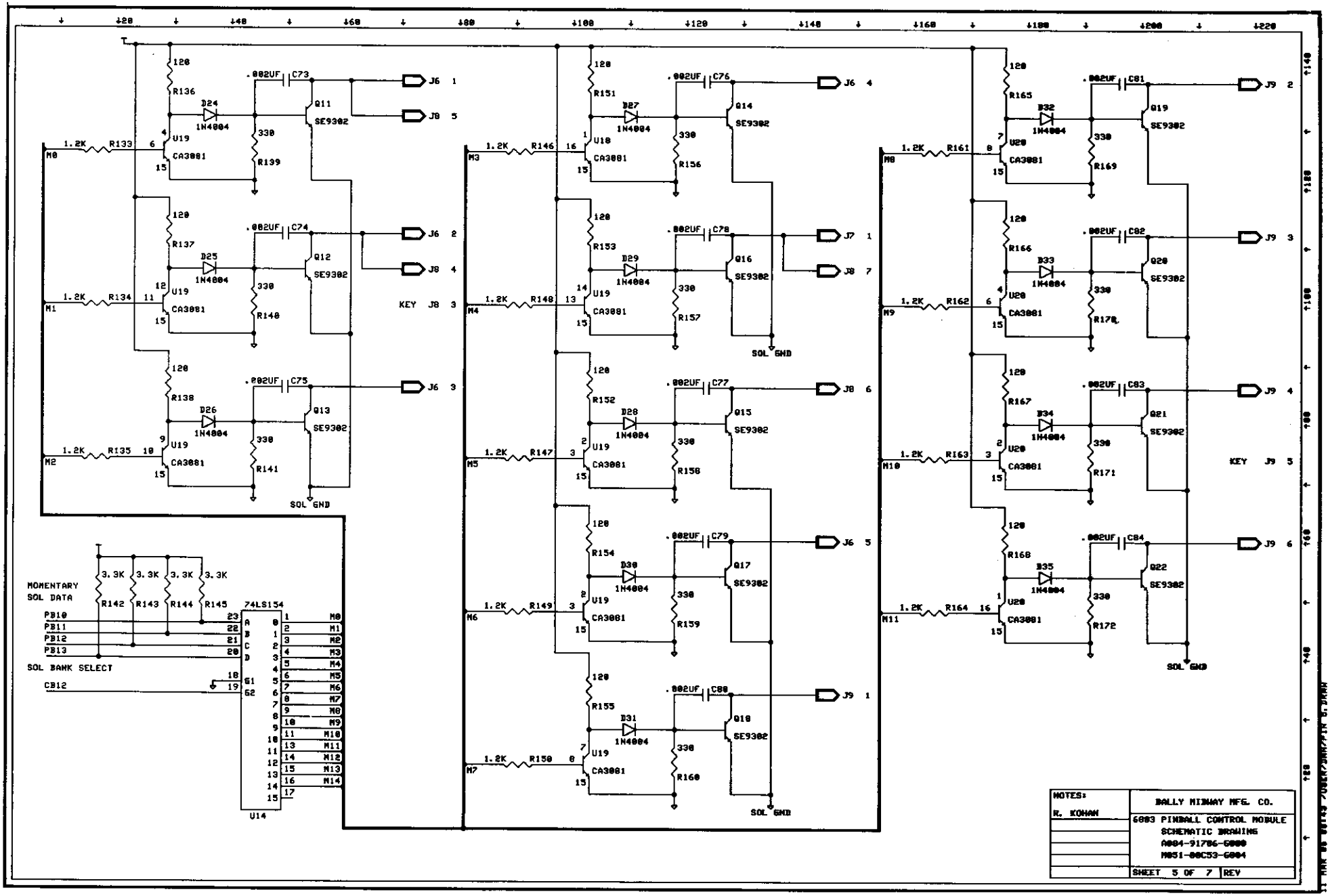
MOMENTARY SOL DATA
SOL BANK SELECT
74LS154
U14
CA3081
SE9302
1N4004
SOL GND
KEY J8 3
KEY J9 5
BALLY MIDWAY MFG. CO.
6803 PINBALL CONTROL MODULE
SCHEMATIC DRAWING
A004-91706-6000
M051-00C53-6004
SHEET 5 OF 7
REV
NOTES:
R. KOHAN

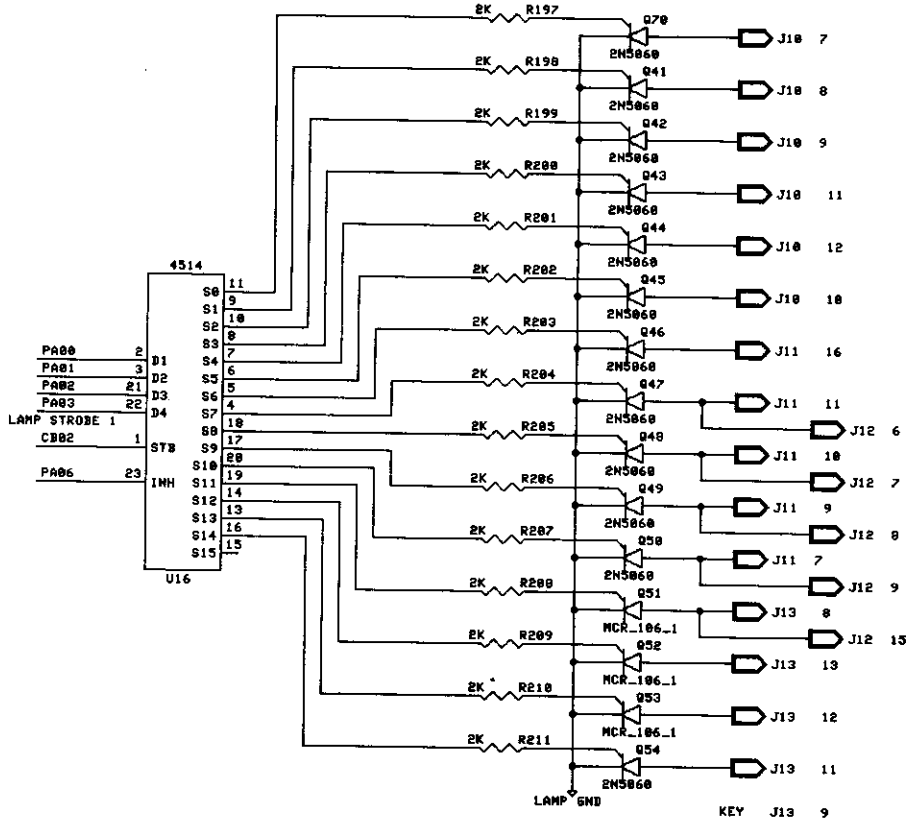

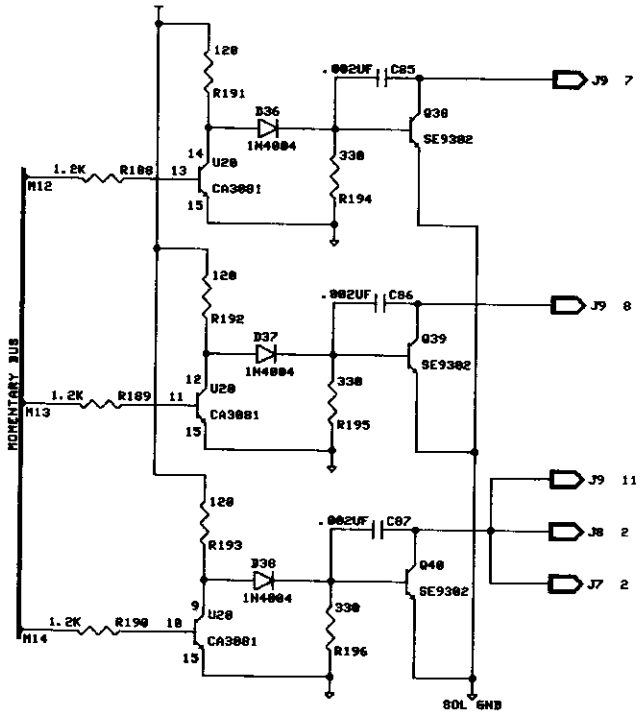

NOTES:	BALLY MIDWAY MFG. CO.
R. KOMAN	6803 PINBALL CONTROL MODULE SCHEMATIC DRAWING A804-91786-6000 M051-00C53-6004
	SHEET 6 OF 7 REV

LAMP DRIVER LOCATIONS

DRIVER	CONNECTOR	PIN	PHASE	WIRE	DESCRIPTION
Q52	J13	13	D	97	A.G. ENTRANCE
Q35	J13	2	C	83	A.G. EXIT
Q30	J11	12	A	72	ANTI GRAVITY
Q35	J13	2	D	83	ATOM BOTTOM
Q29	J11	8	A	64	ATOM SM ARROW
Q51	J13	8	C	93	ATOM TOP
Q34	J13	1	C	81	ATOMIC GEN
Q51	J13	8	D	93	BACK LEFT
Q36	J13	3	D	84	BACK MIDDLE
Q34	J13	1	D	81	BACK RIGHT
Q69	J13	7	A	91	BALL KICKER
Q57	J10	18	B	43	BONUS 1K
Q26	J10	4	B	15	BONUS 2K
Q43	J10	11	B	31	BONUS 3K
Q58	J10	19	B	45	BONUS 4K
Q27	J10	5	B	18	BONUS 5K
Q44	J10	12	B	32	BONUS 6K
Q59	J10	14	B	37	BONUS 7K
Q28	J10	6	B	21	BONUS 8K
Q45	J10	10	B	28	BONUS 9K
Q60	J10	13	B	36	BONUS 10K
Q29	J11	8	B	64	BONUS 20K
Q46	J11	16	B	78	BONUS 30K
Q61	J11	6	B	62	BONUS 40K
Q30	J11	12	B	72	BONUS 50K
Q31	J11	13	B	73	BONUS MULT 2X
Q48	J11	10	B	68	BONUS MULT 3X
Q63	J11	3	B	59	BONUS MULT 4X
Q32	J11	14	B	74	BONUS MULT 5X
Q49	J11	9	B	67	BONUS MULT 6X
Q47	J11	11	B	71	BRAIN (LEFT)
Q62	J11	4	B	61	BRAIN (RIGHT)
Q53	J13	12	A	96	BUBBLE 5K (LEFT)
Q53	J13	12	B	96	BUBBLE 5K (RIGHT)
Q68	J13	12	A	94	BUBBLE 10K (LEFT)
Q68	J13	12	B	94	BUBBLE 10K (RIGHT)
Q37	J13	4	A	85	BUBBLE 15K (LEFT)
Q37	J13	4	B	85	BUBBLE 15K (RIGHT)
Q54	J13	11	A	95	BUBBLE 25K (LEFT)
Q54	J13	11	B	95	BUBBLE 25K (RIGHT)
Q60	J10	13	A	36	COLLECT BONUS
Q69	J13	7	B	91	EXTRA BALL
Q62	J11	4	A	61	HOLE BONUS
Q33	J11	15	B	75	LAB "A"

DRIVER	CONNECTOR	PIN	PHASE
Q50	J11	7	B
Q64	J11	2	B
Q31	J11	13	A
Q61	J11	6	A
Q65	J11	1	B
Q67	J13	5	D
Q67	J13	5	C
Q65	J11	1	A
Q49	J11	9	A
Q64	J11	2	A
Q33	J11	15	A
Q50	J11	7	A
Q42	J10	9	A
Q70	J10	7	B
Q56	J10	17	B
Q24	J10	2	B
Q25	J10	3	B
Q55	J10	16	B
Q41	J10	8	B
Q23	J10	1	B
Q46	J11	16	A
Q42	J10	9	B
Q66	J13	6	C
Q66	J13	6	D
Q52	J13	13	C
Q47	J11	11	A
Q24	J10	2	A
Q25	J10	3	A
Q56	J10	17	A
Q41	J10	8	A
Q55	J10	16	A
Q23	J10	1	A
Q70	J10	7	A
Q63	J11	3	A
Q48	J11	10	A
Q32	J11	14	A
Q36	J13	3	C
Q57	J10	18	A
Q26	J10	4	A
Q43	J10	11	A
Q58	J10	19	A
Q27	J10	5	A
Q44	J10	12	A
Q59	J10	14	A
Q28	J10	6	A
Q45	J10	10	A

OID DRIVER LOCATIONS LISTING
E35-A014

R LOCATIONS

IRE	DESCRIPTION
63	LAB "B"
58	LAB "L"
73	LOAD ATOMS (LEFT)
62	LOAD ATOMS (RIGHT)
48	MATTER TRANS
86	PARTICLE (LEFT)
86	PARTICLE (RIGHT)
48	PARTICLE SEP
67	PLAY MULT 3X
58	PLAY MULT 6X
75	PLAY MULT 9X
63	PLAY MULT 12X
26	SAVER ON
24	SCIENCE "C"(1)
41	SCIENCE "C"(2)
13	SCIENCE "E"(1)
14	SCIENCE "E"(2)
38	SCIENCE "I"
25	SCIENCE "N"
12	SCIENCE "S"
78	SPARK BONUS
26	SPECIAL
37	SPARK 25K
37	SPARK 50K
97	SPARK 75K
71	SPSA
3	STRANGE "A"
4	STRANGE "E"
31	STRANGE "G"
25	STRANGE "N"
38	STRANGE "R"
2	STRANGE "S"
24	STRANGE "T"
59	THUMPER BUMPER LEFT
58	THUMPER BUMPER MIDDLE
74	THUMPER BUMPER RIGHT
34	VOLTS
33	VOLTS 100V
5	VOLTS 200V
31	VOLTS 300V
45	VOLTS 400V
8	VOLTS 500V
32	VOLTS 600V
37	VOLTS 700V
21	VOLTS 800V
28	VOLTS 900V

SOLENOID DRIVER LOCATIONS

TRANSISTOR	CONNECTOR	PIN	WIRE	DESCRIPTION
Q8	J8	1	24	BACK BOX LIGHTS (THROUGH SOLID STATE RELAY BD.)
Q17	J6	5	36	BALL SAVE
Q21	J9	4	54	CLOSE ATOM SMASHER
Q22	J9	6	56	KICKER
Q40	J9	11	59	KNOCKER
Q7	J6	8	90	LEFT FLIPPER (THROUGH FLIPPER RELAY K1)
Q10	J6	7	311	NEON DISPLAY (THROUGH SOLID STATE RELAY BOARD)
Q20	J9	3	53	OPEN ATOM SMASHER
Q39	J9	8	58	OUTHOLE
Q38	J9	7	57	RESERVED FOR GERMAN USE
Q7	J6	9	95	RIGHT FLIPPER (THROUGH FLIPPER RELAY K1)
Q19	J9	2	52	SAUCER
Q16	J8	7	27	SLINGSHOT (LEFT)
Q15	J8	6	25	SLINGSHOT (RIGHT)
Q13	J6	3	34	THUMPER BUMPER (LEFT)
Q12	J6	2	32	THUMPER BUMPER (MIDDLE)
Q14	J6	4	35	THUMPER BUMPER (RIGHT)

WIRE COLOR CODE

1-RED	6-BROWN
2-BLUE	7-ORANGE
3-YELLOW	8-BLACK
4-GREEN	9-GREY
5-WHITE	0-NO TRACER
J-JUMPER	11-VIOLET

1-FIRST NUMBER-BODY COLOR
2-SECOND NUMBER-TRACER COLOR

EXAMPLE: 50-WHITE
51-WHITE-RED

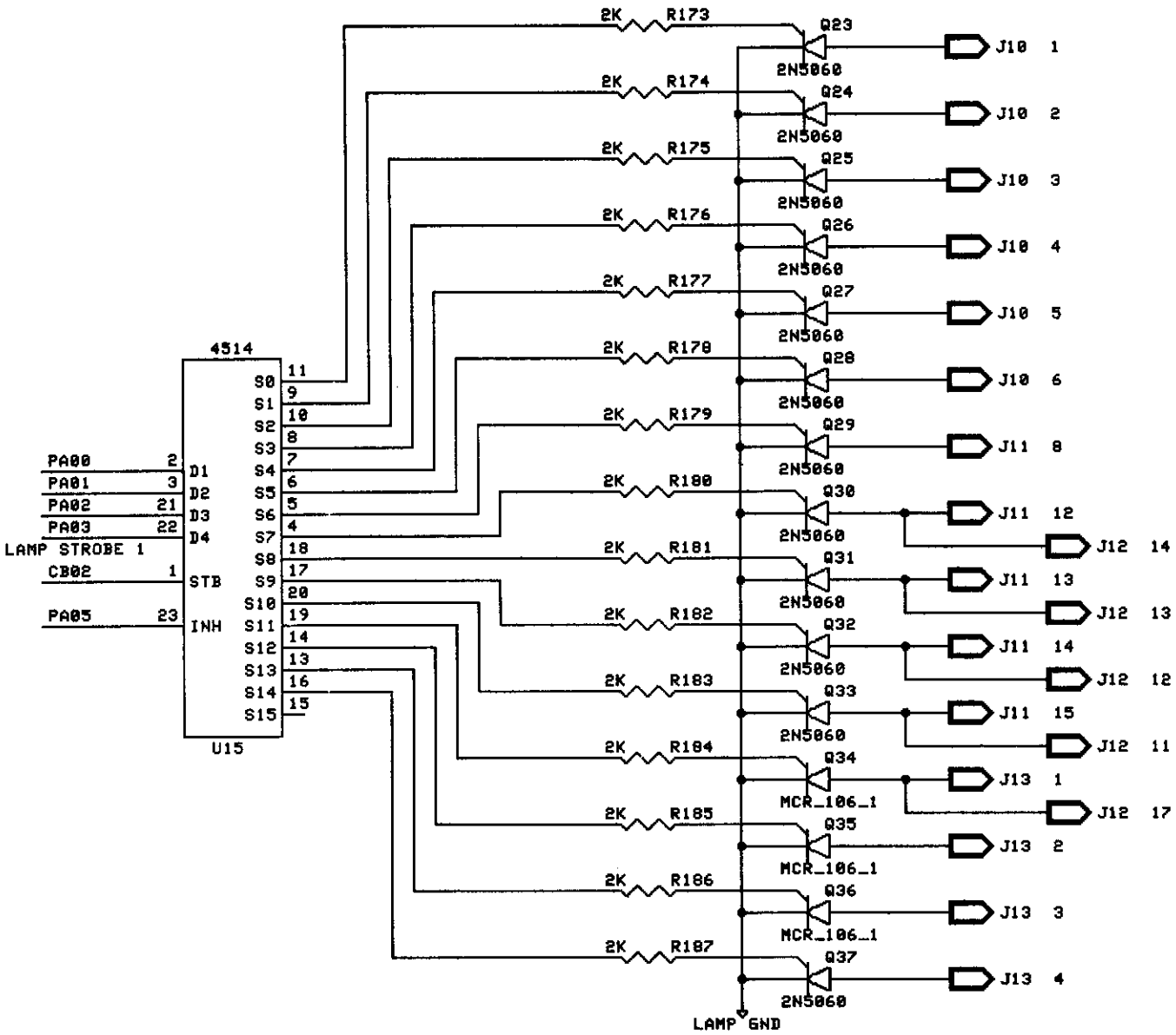
4514
U15
PA00 2
PA01 3
PA02 21
PA03 22
LAMP STROBE 1
CB02 1
PA05 23
D1
D2
D3
D4
STB
INH
S0 11
S1 9
S2 10
S3 8
S4 7
S5 6
S6 5
S7 4
S8 18
S9 17
S10 20
S11 19
S12 14
S13 13
S14 16
S15 15
2K R173
2K R174
2K R175
2K R176
2K R177
2K R178
2K R179
2K R180
2K R181
2K R182
2K R183
2K R184
2K R185
2K R186
2K R187
Q23 2N5060
Q24 2N5060
Q25 2N5060
Q26 2N5060
Q27 2N5060
Q28 2N5060
Q29 2N5060
Q30 2N5060
Q31 2N5060
Q32 2N5060
Q33 2N5060
Q34 MCR_106_1
Q35 MCR_106_1
Q36 MCR_106_1
Q37 2N5060
J10 1
J10 2
J10 3
J10 4
J10 5
J10 6
J11 8
J11 12
J12 14
J11 13
J12 13
J11 14
J12 12
J11 15
J12 11
J13 1
J12 17
J13 2
J13 3
J13 4
LAMP GND

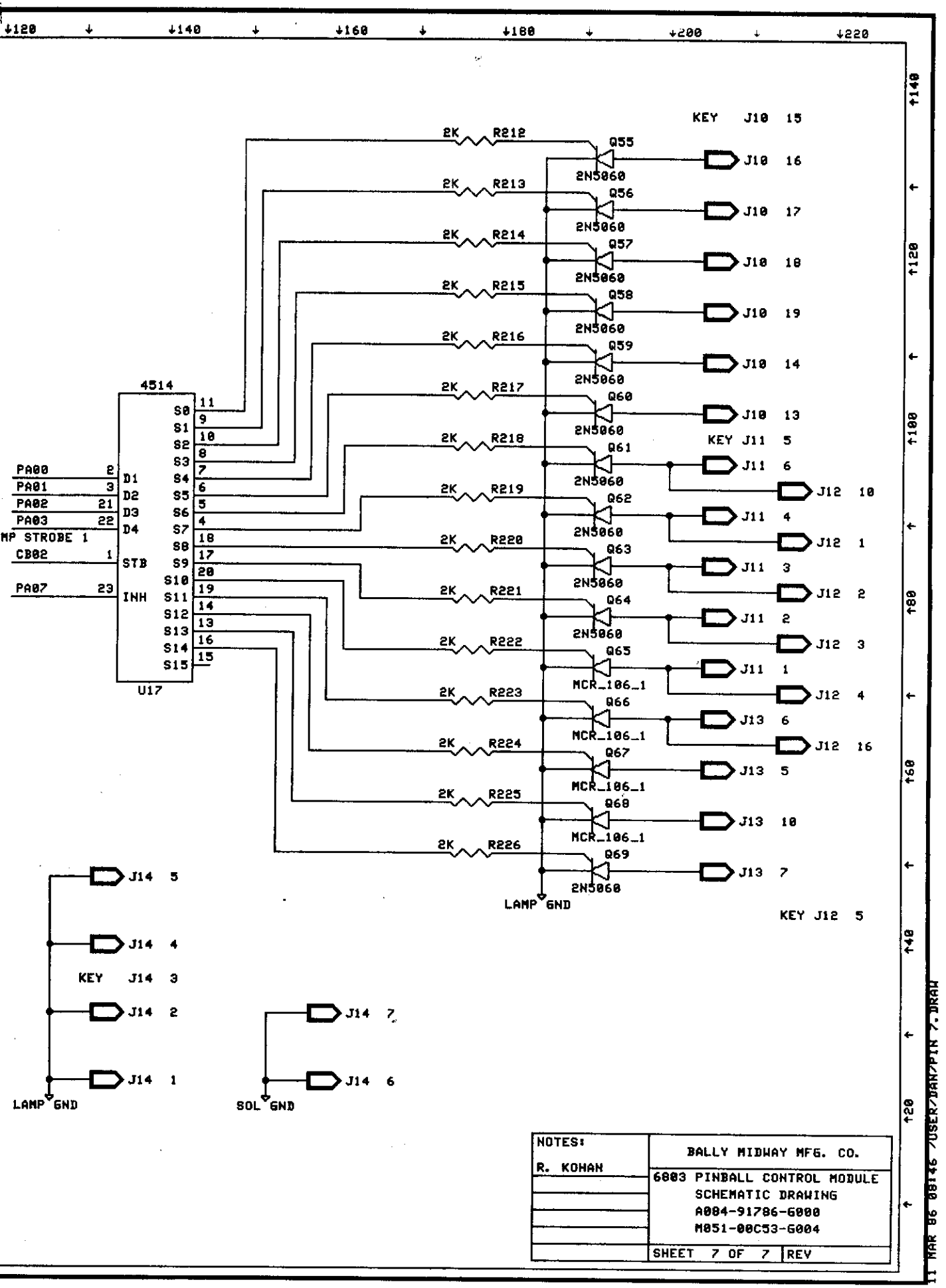
4514
U17
S0 11
S1 9
S2 10
S3 8
S4 7
S5 6
S6 5
S7 4
S8 18
S9 17
S10 20
S11 19
S12 14
S13 13
S14 16
S15 15
D1
D2
D3
D4
STB
INH
PA00 2
PA01 3
PA02 21
PA03 22
MP STROBE 1
CB02 1
PA07 23
2K R212
2K R213
2K R214
2K R215
2K R216
2K R217
2K R218
2K R219
2K R220
2K R221
2K R222
2K R223
2K R224
2K R225
2K R226
Q55 2N5060
Q56 2N5060
Q57 2N5060
Q58 2N5060
Q59 2N5060
Q60 2N5060
Q61 2N5060
Q62 2N5060
Q63 2N5060
Q64 2N5060
Q65 MCR_106_1
Q66 MCR_106_1
Q67 MCR_106_1
Q68 MCR_106_1
Q69 2N5060
LAMP GND
KEY J10 15
J10 16
J10 17
J10 18
J10 19
J10 14
J10 13
KEY J11 5
J11 6
J12 10
J11 4
J12 1
J11 3
J12 2
J11 2
J12 3
J11 1
J12 4
J13 6
J12 16
J13 5
J13 10
J13 7
KEY J12 5
J14 5
J14 4
KEY J14 3
J14 2
J14 1
LAMP GND
J14 7
J14 6
SOL GND
NOTES:
R. KOHAN
BALLY MIDWAY MFG. CO.
6803 PINBALL CONTROL MODULE
SCHEMATIC DRAWING
A004-91786-G000
M051-00C53-G004
SHEET 7 OF 7
REV
11 MAR 86 08:46 /USER/DAN/PIN 7.DRAW

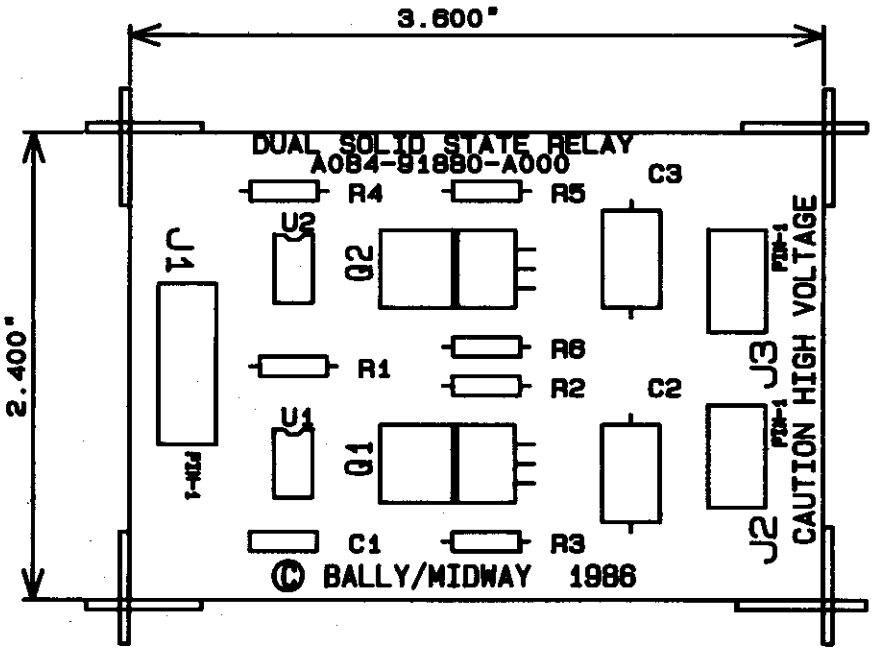

DUAL SOLID STATE RELAY BOARD
CROSS REFERENCE DESIGNATION LIST
A084-91880-A000
M051-00114-A178

DESCRIPTION	QTY	DESIGNATION	PART NUMBER
BLANK P.C.B.	1		A080-91880-A000
.1mF CAP	1	C1	0C68-00800-0005
.1mF CAP	2	C2,C3	0E35-00800-0001
100 OHM RES.	2	R1,R4	100E-00005-0033
180 OHM RES.	2	R2,R5	100E-00005-0039
1.8K OHM RES.	2	R3,R6	100E-00005-0067
TRIAC T2322-B	2	Q1,Q2	104E-00016-0015
OPTO-COUPLER MOC3031	2	U1,U2	120E-00002-0002
.045 PINS	8	J1,J2,J3	0304-00804-0010
SPACER	4		0017-00042-0320

REV. 1 CHANGED U1 AND U2 FROM MOC3011 TO MOC3031

BALLY MIDWAY MFG. CO.			
.062" FR-400	J.S. 10/21/86	ASSEMBLY DRAWING DUAL SS-RELAY PC A084-91880-A000	M051-00114-A177

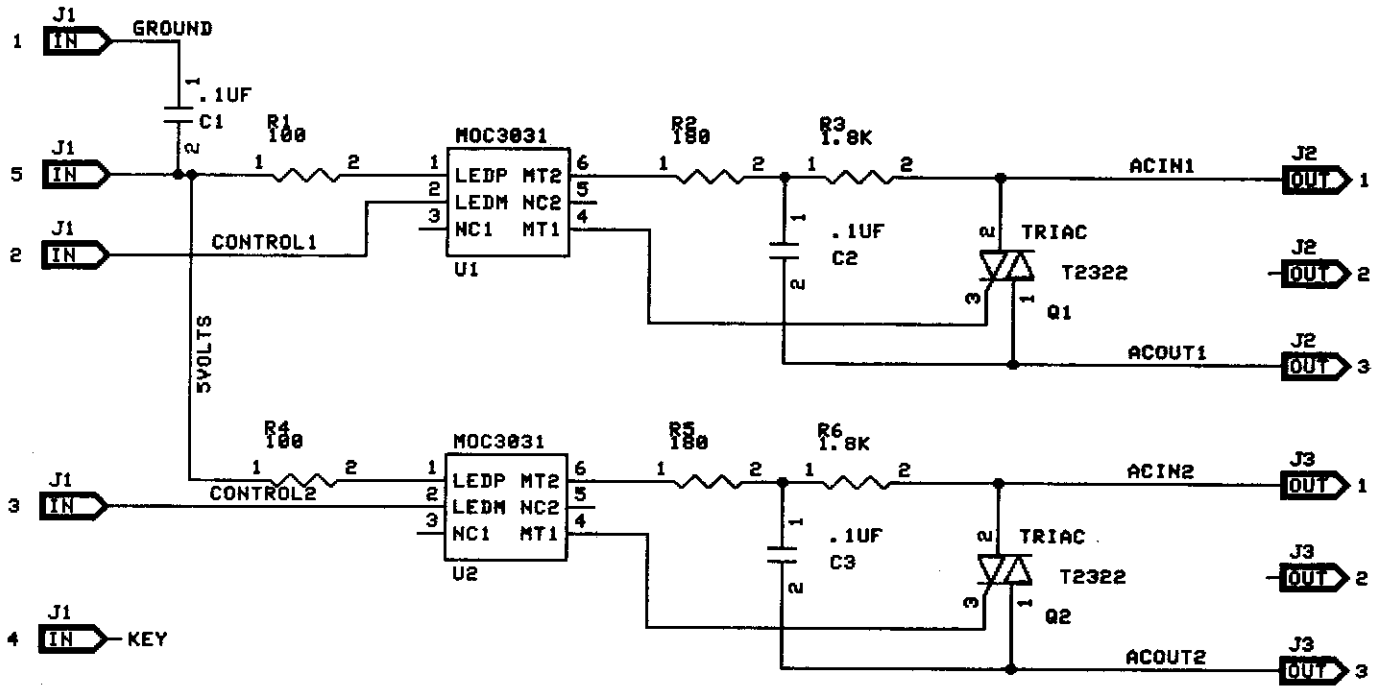

REV. 1 CHANGED FROM MOC3011 TO MOC3031

NOTES:	BALLY MIDWAY MFG. CO.
R. A. PLOUSSARD	
NOV 05 1986	DUAL SOLID STATE RELAY A084-91880-A000 M051-00114-A179
	SHEET 1 OF 1 REV

05 NOV 86 15:21 /USER/RAP/GAMES/STRANGE/SSR/DUAL 1.DRAW

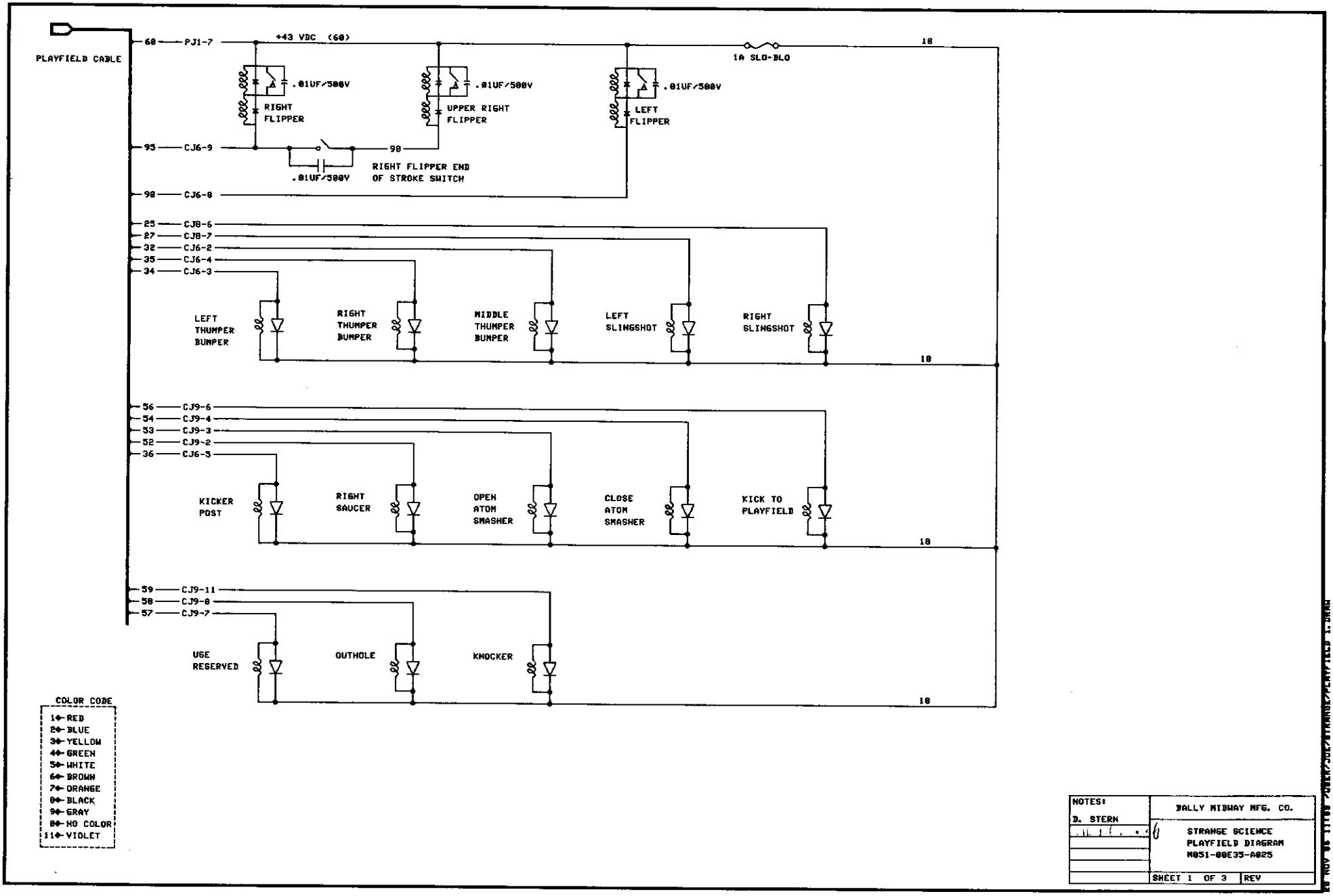
PLAYFIELD CABLE
68 PJ1-7
+43 VDC (60)
1A SLO-BLO
18
.01UF/500V
RIGHT FLIPPER
UPPER RIGHT FLIPPER
LEFT FLIPPER
95 CJ6-9
98
RIGHT FLIPPER END OF STROKE SWITCH
98 CJ6-8
25 CJ8-6
27 CJ8-7
32 CJ6-2
35 CJ6-4
34 CJ6-3
LEFT THUMPER BUMPER
RIGHT THUMPER BUMPER
MIDDLE THUMPER BUMPER
LEFT SLINGSHOT
RIGHT SLINGSHOT
56 CJ9-6
54 CJ9-4
53 CJ9-3
52 CJ9-2
36 CJ6-5
KICKER POST
RIGHT SAUCER
OPEN ATOM SMASHER
CLOSE ATOM SMASHER
KICK TO PLAYFIELD
59 CJ9-11
58 CJ9-8
57 CJ9-7
USE RESERVED
OUTHOLE
KNOCKER
COLOR CODE
1 RED
2 BLUE
3 YELLOW
4 GREEN
5 WHITE
6 BROWN
7 ORANGE
8 BLACK
9 GRAY
10 NO COLOR
11 VIOLET
NOTES:
D. STERN
BALLY MIDWAY MFG. CO.
STRANGE SCIENCE
PLAYFIELD DIAGRAM
M051-00E35-A025
SHEET 1 OF 3
REV

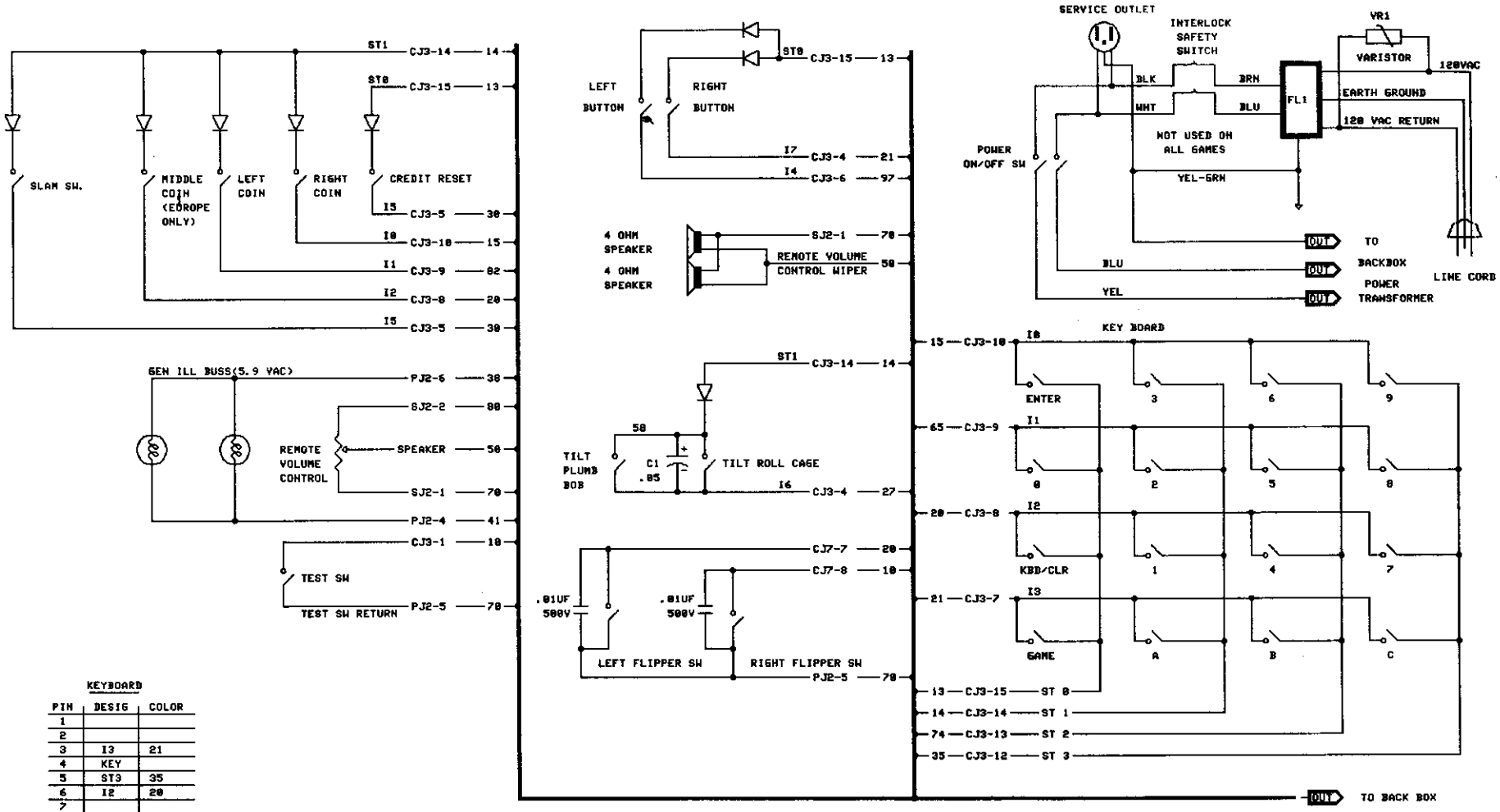

KEYBOARD

PIN	DESIG	COLOR
1		
2		
3	I3	21
4	KEY	
5	ST3	35
6	I2	20
7		
8	ST2	74
9		
10	I1	65
11	ST1	14
12		
13	I0	15
14		
15	ST0	13

COLOR CODE

1=RED	7=ORANGE
2=BLUE	8=BLACK
3=YELLOW	9=GRAY
4=GREEN	0=NO TRACE
5=WHITE	11-VIOLET
6=BROWN	

NOTES:

D. STERN

D.L.P.

BALLY MIDWAY MFG. CO.

STRANGE SCIENCE
CABINET DIAGRAM
M051-00E35-A003

SHEET 1 OF 1 REV

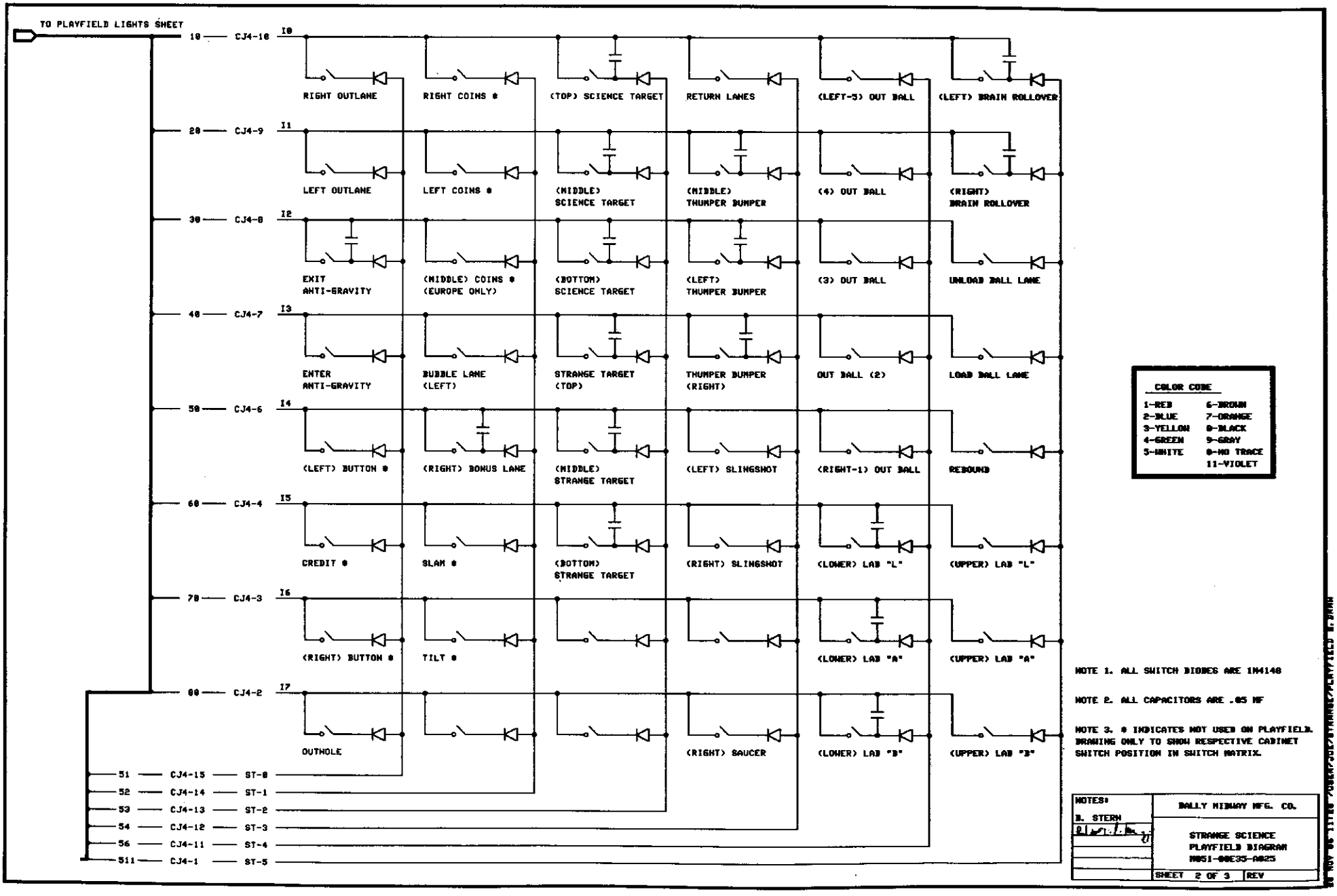
TO PLAYFIELD LIGHTS SHEET
10 — CJ4-16 I0
20 — CJ4-9 I1
30 — CJ4-8 I2
40 — CJ4-7 I3
50 — CJ4-6 I4
60 — CJ4-4 I5
70 — CJ4-3 I6
80 — CJ4-2 I7
RIGHT OUTLANE
RIGHT COINS *
(TOP) SCIENCE TARGET
RETURN LANES
(LEFT-5) OUT BALL
(LEFT) BRAIN ROLLOVER
LEFT OUTLANE
LEFT COINS *
(MIDDLE) SCIENCE TARGET
(MIDDLE) THUMPER BUMPER
(4) OUT BALL
(RIGHT) BRAIN ROLLOVER
EXIT ANTI-GRAVITY
(MIDDLE) COINS * (EUROPE ONLY)
(BOTTOM) SCIENCE TARGET
(LEFT) THUMPER BUMPER
(3) OUT BALL
UNLOAD BALL LANE
ENTER ANTI-GRAVITY
BUBBLE LANE (LEFT)
STRANGE TARGET (TOP)
THUMPER BUMPER (RIGHT)
OUT BALL (2)
LOAD BALL LANE
(LEFT) BUTTON *
(RIGHT) BONUS LANE
(MIDDLE) STRANGE TARGET
(LEFT) SLINGSHOT
(RIGHT-1) OUT BALL
REBOUND
CREDIT *
SLAM *
(BOTTOM) STRANGE TARGET
(RIGHT) SLINGSHOT
(LOWER) LAB "L"
(UPPER) LAB "L"
(RIGHT) BUTTON *
TILT *
(LOWER) LAB "A"
(UPPER) LAB "A"
OUTHOLE
(RIGHT) SAUCER
(LOWER) LAB "B"
(UPPER) LAB "B"
51 — CJ4-15 — ST-0
52 — CJ4-14 — ST-1
53 — CJ4-13 — ST-2
54 — CJ4-12 — ST-3
56 — CJ4-11 — ST-4
511 — CJ4-1 — ST-5
COLOR CODE
1-RED 6-BROWN
2-BLUE 7-ORANGE
3-YELLOW 8-BLACK
4-GREEN 9-GRAY
5-WHITE 0-NO TRACE
11-VIOLET
NOTE 1. ALL SWITCH DIODES ARE 1N4148
NOTE 2. ALL CAPACITORS ARE .05 MF
NOTE 3. * INDICATES NOT USED ON PLAYFIELD. DRAWING ONLY TO SHOW RESPECTIVE CABINET SWITCH POSITION IN SWITCH MATRIX.
NOTES:
B. STERN
BALLY MIDWAY MFG. CO.
STRANGE SCIENCE
PLAYFIELD DIAGRAM
N851-00E35-A025
SHEET 2 OF 3
REV

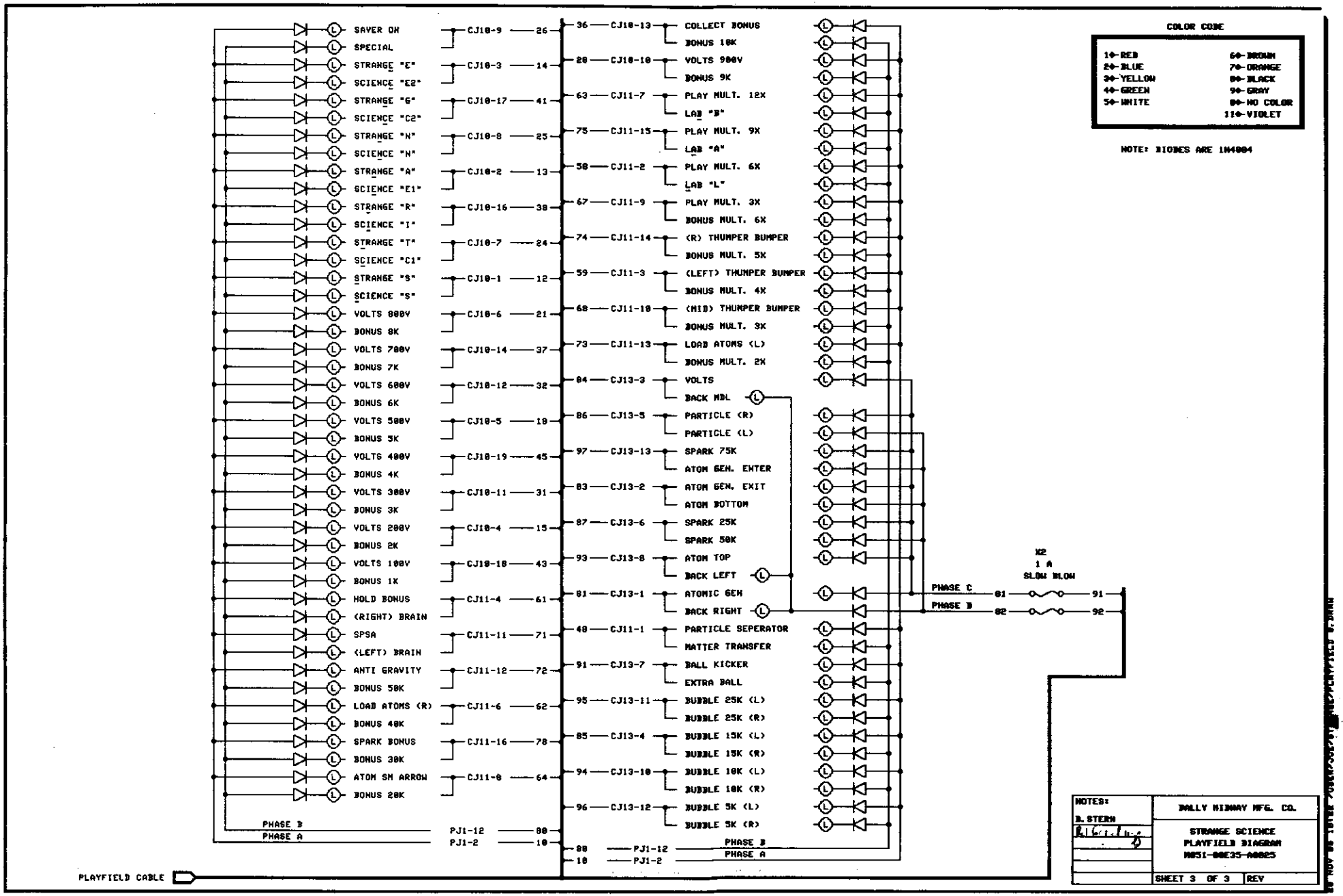
SAVER ON
SPECIAL
STRANGE "E"
SCIENCE "E2"
STRANGE "G"
SCIENCE "C2"
STRANGE "N"
SCIENCE "N"
STRANGE "A"
SCIENCE "E1"
STRANGE "R"
SCIENCE "I"
STRANGE "T"
SCIENCE "C1"
STRANGE "S"
SCIENCE "S"
VOLTS 800V
BONUS 8K
VOLTS 700V
BONUS 7K
VOLTS 600V
BONUS 6K
VOLTS 500V
BONUS 5K
VOLTS 400V
BONUS 4K
VOLTS 300V
BONUS 3K
VOLTS 200V
BONUS 2K
VOLTS 100V
BONUS 1K
HOLD BONUS
(RIGHT) BRAIN
SPSA
(LEFT) BRAIN
ANTI GRAVITY
BONUS 50K
LOAD ATOMS (R)
BONUS 40K
SPARK BONUS
BONUS 30K
ATOM SM ARROW
BONUS 20K
CJ10-9 26
CJ10-3 14
CJ10-17 41
CJ10-8 25
CJ10-2 13
CJ10-16 38
CJ10-7 24
CJ10-1 12
CJ10-6 21
CJ10-14 37
CJ10-12 32
CJ10-5 10
CJ10-19 45
CJ10-11 31
CJ10-4 15
CJ10-18 43
CJ11-4 61
CJ11-11 71
CJ11-12 72
CJ11-6 62
CJ11-16 78
CJ11-8 64
PHASE B
PHASE A
PJ1-12 80
PJ1-2 10
36 CJ10-13 COLLECT BONUS
BONUS 10K
28 CJ10-10 VOLTS 900V
BONUS 9K
63 CJ11-7 PLAY MULT. 12X
LAB "B"
75 CJ11-15 PLAY MULT. 9X
LAB "A"
58 CJ11-2 PLAY MULT. 6X
LAB "L"
67 CJ11-9 PLAY MULT. 3X
BONUS MULT. 6X
74 CJ11-14 (R) THUMPER BUMPER
BONUS MULT. 5X
59 CJ11-3 (LEFT) THUMPER BUMPER
BONUS MULT. 4X
68 CJ11-10 (MID) THUMPER BUMPER
BONUS MULT. 3X
73 CJ11-13 LOAD ATOMS (L)
BONUS MULT. 2X
84 CJ13-3 VOLTS
BACK MDL
86 CJ13-5 PARTICLE (R)
PARTICLE (L)
97 CJ13-13 SPARK 75K
ATOM GEN. ENTER
83 CJ13-2 ATOM GEN. EXIT
ATOM BOTTOM
87 CJ13-6 SPARK 25K
SPARK 50K
93 CJ13-8 ATOM TOP
BACK LEFT
81 CJ13-1 ATOMIC GEN
BACK RIGHT
48 CJ11-1 PARTICLE SEPERATOR
MATTER TRANSFER
91 CJ13-7 BALL KICKER
EXTRA BALL
95 CJ13-11 BUBBLE 25K (L)
BUBBLE 25K (R)
85 CJ13-4 BUBBLE 15K (L)
BUBBLE 15K (R)
94 CJ13-10 BUBBLE 10K (L)
BUBBLE 10K (R)
96 CJ13-12 BUBBLE 5K (L)
BUBBLE 5K (R)
88 PJ1-12 PHASE B
10 PJ1-2 PHASE A
PHASE C 81 91
PHASE B 82 92
X2
1 A
SLOW BLOW
PLAYFIELD CABLE
COLOR CODE
1-RED
2-BLUE
3-YELLOW
4-GREEN
5-WHITE
6-BROWN
7-ORANGE
8-BLACK
9-GRAY
0-NO COLOR
11-VIOLET
NOTE: DIODES ARE 1N4004
NOTES:
D. STERN
BALLY MIDWAY MFG. CO.
STRANGE SCIENCE
PLAYFIELD DIAGRAM
M051-00E35-A0025
SHEET 3 OF 3
REV

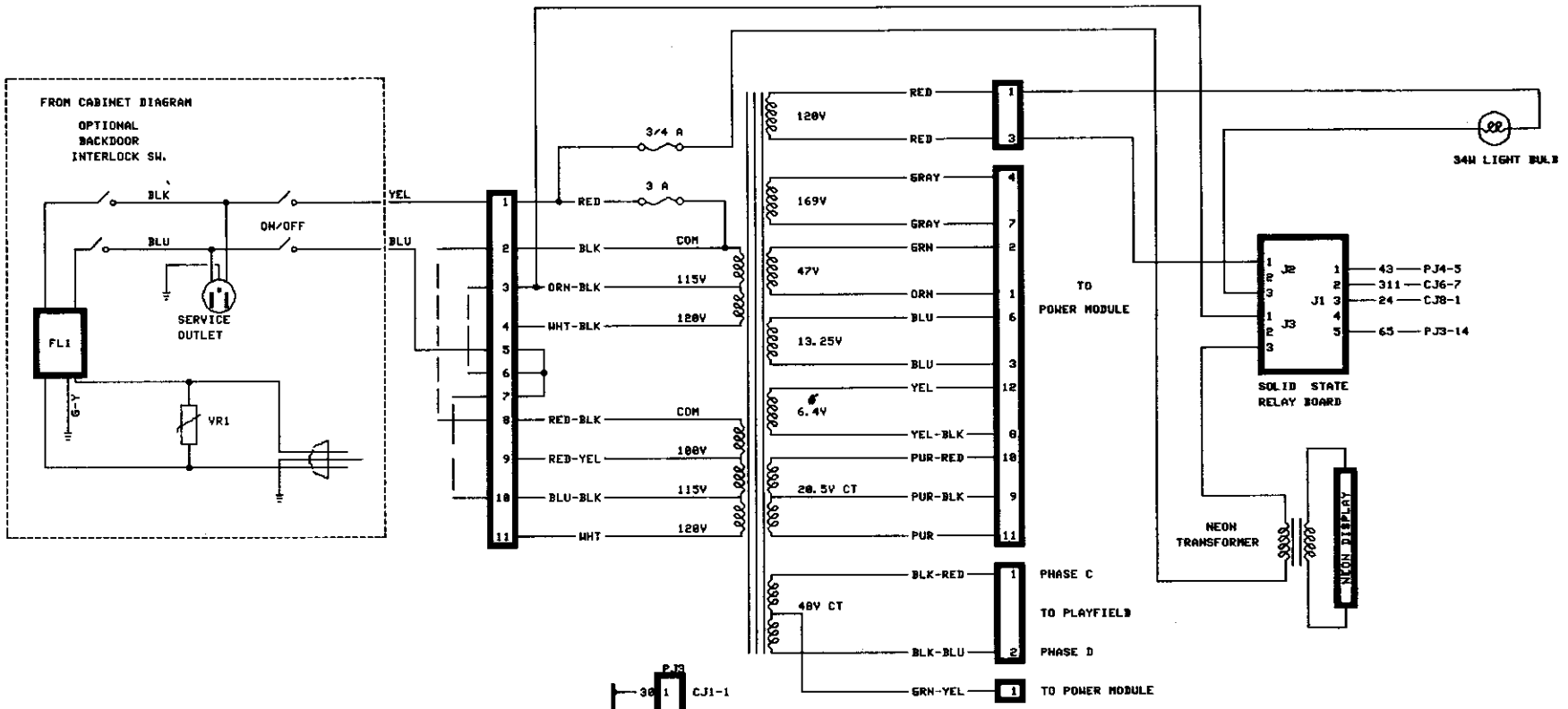

PAGE 1 OF 3 (BACKBOX)

CJ-10

		"A"PHASE	"B"PHASE
12	1	STRANGE "S"	SCIENCE "S"
13	2	STRANGE "A"	SCIENCE "E1"
14	3	STRANGE "E"	SCIENCE "E2"
15	4	VOLTS 200V	BONUS 2K
18	5	VOLTS 500V	BONUS 5K
21	6	VOLTS 800V	BONUS 8K
24	7	STRANGE "T"	SCIENCE "C1"
25	8	STRANGE "N"	SCIENCE "N"
26	9	SAVER ON	SPECIAL
28	10	VOLTS 900V	BONUS 9K
31	11	VOLTS 300V	BONUS 3K
32	12	VOLTS 600V	BONUS 6K
36	13	COLLECT BONUS	BONUS 10K
37	14	VOLTS 700V	BONUS 7K
	15	KEY	
38	16	STRANGE "R"	SCIENCE "I"
41	17	STRANGE "G"	SCIENCE "C2"
43	18	VOLTS 100V	BONUS 1K
45	19	VOLTS 400V	BONUS 4K

CJ-11

		"A"PHASE	"B"PHASE
48	1	PARTICLE SEP	MATTER TRANS
58	2	PLAY MULT 6X	LAB "L"
59	3	TB (LEFT)	BONUS MULT 4X
61	4	HOLD BONUS	BRAIN (RIGHT)
	5	KEY	
62	6	LOAD ATOMS (R)	BONUS 40K
63	7	PLAY MULT 12X	LAB "B"
64	8	ATOM SM. ARROW	BONUS 20K
67	9	PLAY MULT 3X	BONUS MULT 6X
68	10	TB (MIDDLE)	BONUS MULT 3X
71	11	SPSA	BRAIN (LEFT)
72	12	ANTI GRAVITY	BONUS 50K
73	13	LOAD ATOMS (L)	BONUS MULT 2X
74	14	TB (RIGHT)	BONUS MULT 5X
75	15	PLAY MULT 9X	LAB "A"
78	16	SPARK BONUS	BONUS 30K

LAMP OUTPUTS

CJ-12

		"A"PHASE	"B"PHASE
	1		
	2		
	3		
	4		
	5	KEY	
	6		
	7		
	8		
	9		
	10		
	11		
	12		
	13		
	14		
	15		
	16		
	17		

CJ-13

		"A"PHASE # DENOTES "C" PHASE	"B"PHASE ## DENOTES "D" PHASE
81	1	ATOMIC GEN #	BACK RT ##
83	2	AT. GEN. EXIT#	ATOM BTM ##
84	3	VOLTS #	BACK MDL ##
85	4	BUBBLE 15K(L)	BUBBLE 15K(R)
86	5	PARTICLE (R) #	PARTICLE (L)##
87	6	SPARK 25K #	SPARK 50K##
91	7	BALL KICKER	EXTRA BALL
93	8	ATOM TOP #	BACK LFT ##
	9	KEY	
94	10	BUBBLE 10K(L)	BUBBLE 10K (R)
95	11	BUBBLE 25K(L)	BUBBLE 25K (R)
96	12	BUBBLE 5K(L)	BUBBLE 5K (R)
97	13	SPARK 75K #	A.G. ENTRANCE##

CJ-6

31	1	N/U
32	2	MID. THUMPER BUMPER
34	3	LEFT THUMPER BUMPER
35	4	RIGHT THUMPER BUMPER
36	5	KICKER POST
	6	KEY
311	7	NEON DISPLAY
90	8	LEFT FLIPPER
95	9	RIGHT FLIPPER

CJ-8

24	1	BACKBOX LIGHT
	2	
	3	KEY
	4	
	5	
25	6	RIGHT SLINGSHOT
27	7	LEFT SLINGSHOT

CJ-7

	1	
	2	
	3	
	4	
	5	
	6	
28	7	LEFT FLIP SW
18	8	RIGHT FLIP SW

CJ-9

51	1	N/U
52	2	RIGHT SAUCER
53	3	OPEN ATOM SMASHER
54	4	CLOSE ATOM SMASHER
	5	KEY
56	6	KICK TO PLAYFIELD
57	7	RESERVED FOR GERMAN
58	8	OUTHOLE
511	9	N/U
24	10	N/U
59	11	KNOCKER

SOLENOID OUTPUTS

CJ-5

	1	
	2	
	3	
	4	
	5	KEY
	6	
28	7	SJ1-1
25	8	SJ1-2
28	9	SJ1-3
21	10	SJ1-4
	11	
	12	
	13	
	14	
27	15	SJ1-7

SOUND INFO. OUTPUT

CJ-4

511	1	ST5
88	2	I7
78	3	I6
68	4	I5
	5	KEY
58	6	I4
48	7	I3
38	8	I2
28	9	I1
18	10	I0
56	11	ST4
54	12	ST3
53	13	ST2
52	14	ST1
51	15	ST0

PLAYFIELD SWITCHES

CJ-3

18	1	TEST BUTTON
	2	
	3	KEY
27	4	I6
38	5	I5
97	6	I4
21	7	I3
28	8	I2
65	9	I1
15	10	I0
	11	
35	12	ST3
74	13	ST2
14	14	ST1
13	15	ST0

CABINET SWITCHES

CJ-2

38	1	B1J1-16 + B2J1-16
14	2	B1J1-3,B1J1-14,B2J1-3
18	3	B1J1-5,B2J1-5,B1J2-11
21	4	B1J1-7,B2J1-7,B2J1-14
23	5	B1J1-8,B2J1-8,B2J1-11
28	6	B1J1-6,B2J1-6
15	7	B1J1-4,B2J1-4
13	8	B1J1-2,B2J1-2
12	9	B1J1-1,B2J1-1
	10	N/U
	11	N/U
38	12	B2J1-9
24	13	B1J1-9,B1J1-21,B2J1-21
35	14	B1J1-20,B2J1-20
	15	KEY
34	16	B1J1-19,B2J1-19
32	17	B1J1-18,B2J1-18
31	18	B1J1-17,B2J1-17
	19	N/U

DIGITAL DISPLAY OUTPUTS

CJ-1

30	1	PJ3-1
	2	
65	3	PJ3-15
67	4	PJ3-3
	5	KEY
98	6	PJ3-7
58	7	PJ3-4
18	8	PJ3-11
	9	
70	10	PJ3-12
70	11	PJ3-13
	12	

CJ-14

	1	
28	2	PJ3-6
	3	KEY
28	4	PJ3-5
25	5	PJ3-8
18	6	PJ3-9
18	7	PJ3-2

POWER INPUTS

COLOR CODE

1-RED	6-BROWN
2-BLUE	7-ORANGE
3-YELLOW	8-BLACK
4-GREEN	9-GRAY
5-WHITE	0-NO TRACE
	11-VIOLET

NOTES

CJ-12 NOT USED

NOTES: D. STERN	BALLY MIDWAY MFG. CO.
	STRANGE SCIENCE BACKBOX M051-00E35-A026
	SHEET 2 OF 3 REV

DISPLAYS-D

PLYR 1&2

D1J1

12	CJ2-9	1
13	CJ2-8	2
14	CJ2-2	3
15	CJ2-7	4
18	CJ2-3	5
20	CJ2-6	6
21	CJ2-4	7
23	CJ2-5	8
24	CJ2-13	9
KEY	KEY	10
18	CJ2-3	11
28	PJ4-7	12
N/U	N/U	13
14	CJ2-2	14
N/U	N/U	15
30	CJ2-1	16
31	CJ2-18	17
32	CJ2-17	18
34	CJ2-16	19
35	CJ2-14	20
24	CJ2-13	21
40	PJ4-6	22
10	PJ4-9	23
N/U	N/U	24

PLYR 3&4

D2J1

12	CJ2-9	1
13	CJ2-8	2
14	CJ2-2	3
15	CJ2-7	4
18	CJ2-3	5
20	CJ2-6	6
21	CJ2-4	7
23	CJ2-5	8
38	CJ2-12	9
KEY	KEY	10
23	CJ2-5	11
28	PJ4-7	12
N/U	N/U	13
21	CJ2-4	14
N/U	N/U	15
30	CJ2-1	16
31	CJ2-18	17
32	CJ2-17	18
34	CJ2-16	19
35	CJ2-14	20
24	CJ2-13	21
40	PJ4-6	22
10	PJ4-9	23
N/U	N/U	24

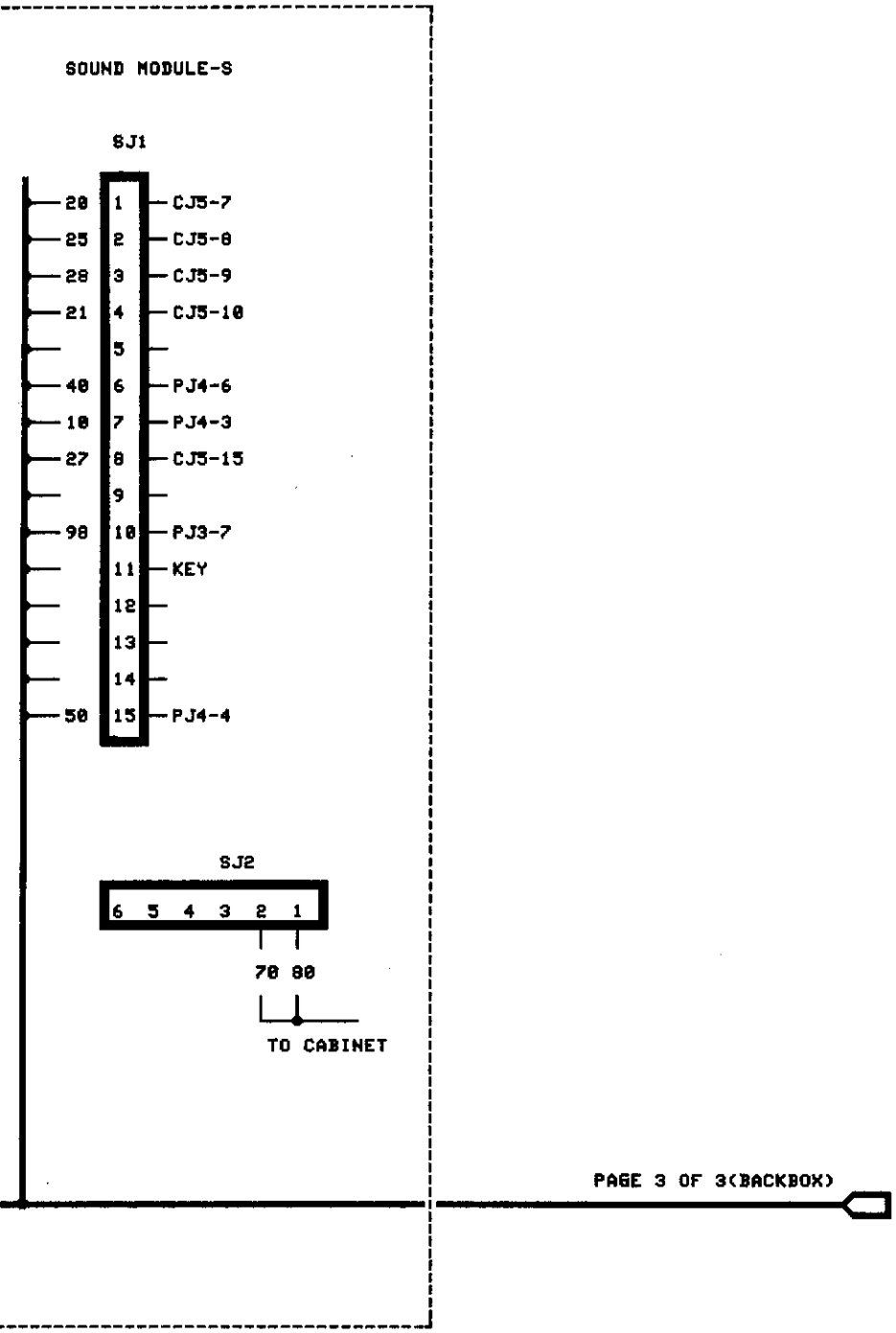

COLOR CODE	
1 - RED	6 - BROWN
2 - BLUE	7 - ORANGE
3 - YELLOW	8 - BLACK
4 - GREEN	9 - GRAY
5 - WHITE	0 - NO TRACE
	11 - VOILET

NOTES:	BALLY MIDWAY MFG. CO.
D. STERN	STRANGE SCIENCE BACKBOX M051-00E35-A026
	SHEET 3 OF 3 REV

BALLY/MIDWAY'S STRANGE SCIENCE
#E35
ROM/EPROM PART NUMBERS

UNPROGRAMMED CONTROL BOARD A084-91786-G000
PROGRAMMED CONTROL BOARD A084-91786-AE35

POS.	MIDWAY PART NUMBER
U2	0E35-00803-0001
U3	0E35-00803-0002

JUMPERS	IN	OUT
JW1		**
JW2	**	
JW3		**
JW4	**	
JW5		**
JW6	**	
JW7		**
JW8		**
JW9	**	
JW10	**	
JW11		**

UNPROGRAMMED TURBO CHEAP SQUEAK FOR PINBALL A084-91855-C000
PROGRAMMED TURBO CHEAP SQUEAK FOR PINBALL A084-91855-AE35

POS.	MIDWAY PART NUMBER
U7	0E35-00803-0003

JUMPERS	IN	OUT
JW1		**
JW2	**	
JW3	**	
JW4	**	
JW5	**	
JW6	**	
JW7	**	
JW8	**	

M051-00E35-A008	REVISIONS
11-24-86	RELEASE FOR PRODUCTION